Product data sheet

System Filter

The Center System Filter offers a highly effective and minimal maintenance central heating system protection.

The magnetic filter is designed to protect domestic central heating systems by efficiently removing magnetite; helping to prolong component life whilst also maintaining system efficiency

Features:

- Effective central heating system protection
- Efficient removal of magnetite through the use of powerful internal magnets
- No blocking or restriction of flow, even when at maximum capacity
- Clever bypass valve allows the filter to be serviced whilst the heating system continues to run unaffected
- Easy service canister features drain and air bleed ports as well as an ultra-thin magnetic sheath for easier cleaning
- Suitable for installation on both horizontal and vertical pipework
- Compatible with Center Quick Dose Inhibitor (609942) and Cleaner (609943)

Center System Filter | 22mm	Product Code: 609932
Canister Material	Nylon, Glass reinforced
Fluid capacity	260ml
Inlet diameter	22mm at valve
Outlet diameter	22mm at valve
Flow configuration	Uni-directional (flow indication arrow)
Valve to canister seals	EPDM

2 year guarantee

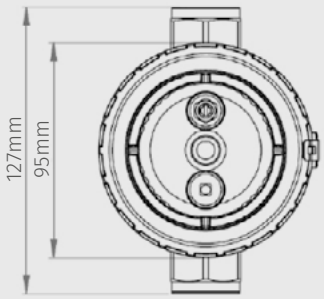

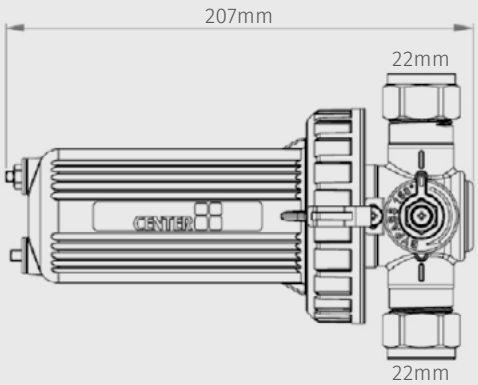

The information contained on this page was correct at date of issue. Fitting dimensions are provided as a guide only. Some variation may occur due to manufacturing tolerances. We pursue a policy of conitinuing improvement in design and performance of its products and so reserves the right to change specifications without prior notice.

Operating Parameters

- **Internal water operating temperature:** between 3°C and 95°C.
- **Internal operating water pressure:** up to 4.5 bar
- **Ambient operating temperature:** 3°C to 60°C

Box Contents

- Filter
- Installation & Servicing Manual
- Installation & Servicing Tool

Spares Available to Order

- Valve / Port Hardware Kit: 609933
- Seal Kit: 609934

Installation & Servicing:

The Center System Filter can be connected directly onto 22mm pipe work using the compression valve fittings provided. The required section of pipework to be removed is 83mm

The unit can be installed on either horizontal or vertical pipe work. However, the Center System Filter must **NOT** be installed vertically; the canister should be installed parallel to the ground.

The Center System Filter can be easily put into bypass mode by turning the valve through 180°. This enables the filter to be serviced without impacting the Central Heating System.

Installation Overview (For full instructions refer to Installation & Servicing Manual):

The filter can be installed anywhere in the main circuit. However, to achieve the best level of protection for the boiler, it is recommended that it is fitted after the last radiator and before the boiler. In determining the best location, it is important to allow adequate access for servicing.

Note - In both diagrams (below), position A is best practice, while B is acceptable.

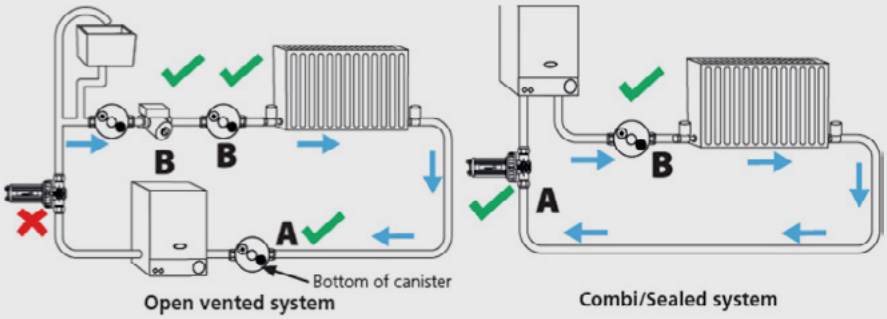

It is recommended that the filter should be installed and serviced by a qualified heating engineer.

CAUTION:

Center System filter contains a strong magnet. Keep away from all electrical devices, bank cards and other magnetic devices.

Center System filter contains a strong magnet. Caution should be taken at all times when handling if you have a pacemaker fitted.

Center System filter is a pressurized device. Always release pressure before servicing.

Unit may be hot in operation. Handle with care.

Wolseley UK Ltd
Warwickshire
CV34 6DY
www.wolseley.co.uk

The information contained on this page was correct at date of issue. Fitting dimensions are provided as a guide only. Some variation may occur due to manufacturing tolerances. We pursue a policy of conitinuing improvement in design and performance of its products and so reserves the right to change specifications without prior notice.