Vokèra

MYNUTE HE

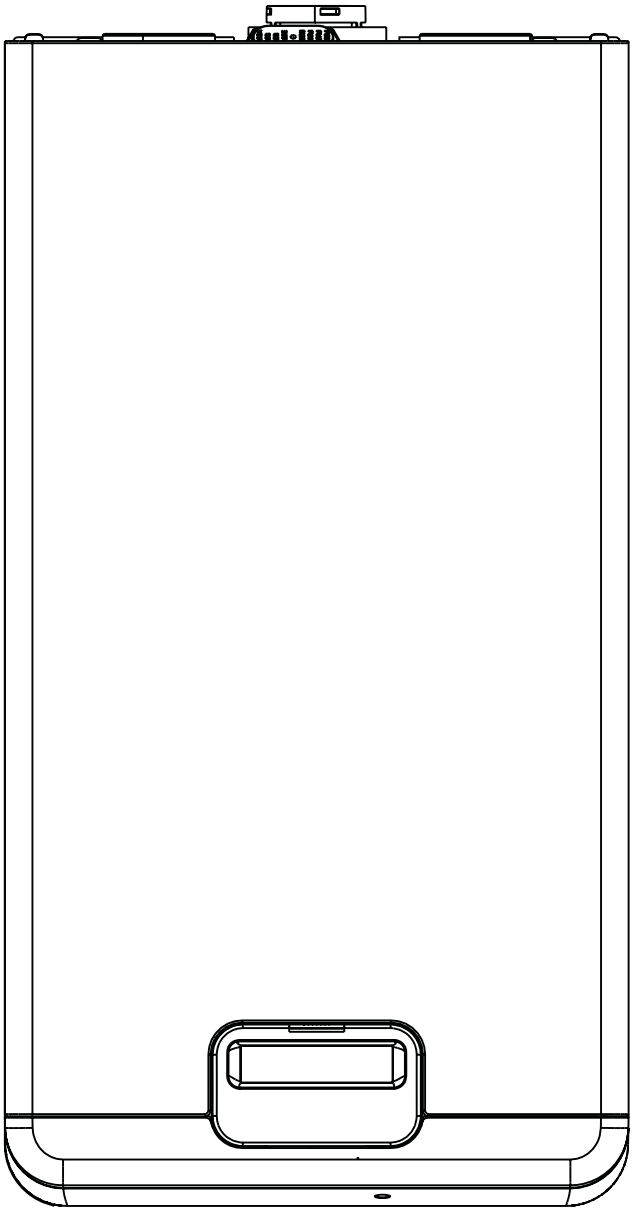

Installation & Servicing Instructions

CE 0694
0694BQ0479

THESE INSTRUCTIONS
TO BE RETAINED
BY USER

benchmark™
The code of practice for the installation, commissioning & servicing of central heating systems

Contents

INTRODUCTION

The Mynute 35HE is a high-efficiency system boiler with an output of 34kW. The appliance - by design - incorporates electronic ignition, circulating pump, expansion vessel, safety valve, pressure gauge and automatic by-pass.

The 35HE is produced as a room sealed, category II2H3P appliance, suitable for internal wall mounting applications only. It is provided with a fan powered flue outlet with an annular co-axial combustion air intake that can be rotated - horizontally - through 360 degrees for various horizontal or vertical applications. The 35HE can also be used with the Vokera twin flue system.

The Mynute 35HE is approved for use with C12 & C32 type flue applications.

This appliance is designed for use with a sealed system only; consequently it is not intended for use on open vented systems.

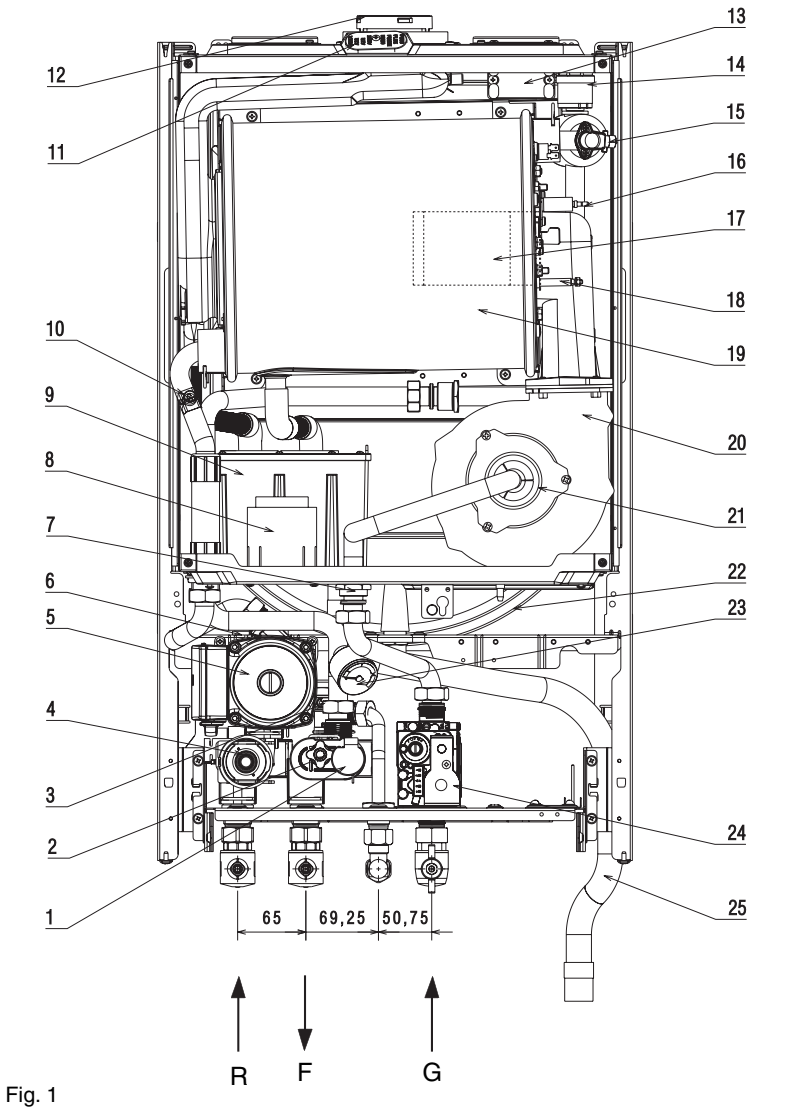

Fig. 1

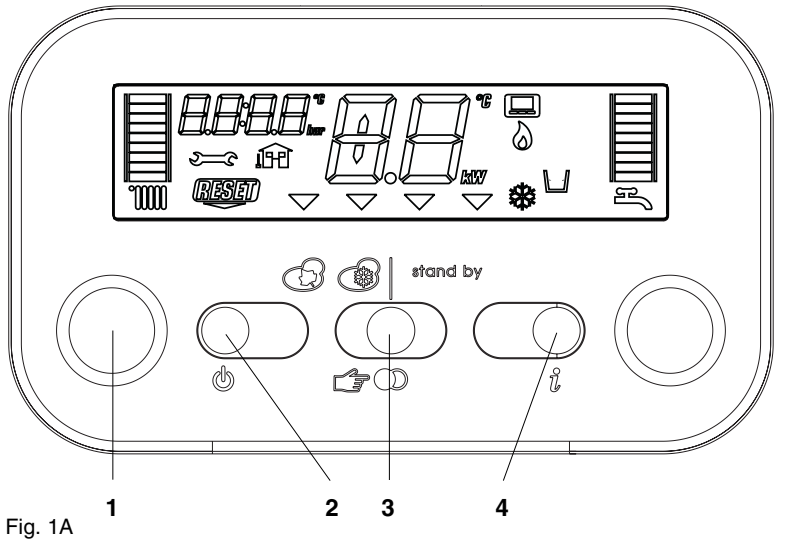

Fig. 1A

General layout (fig. 1)

1 Water pressure sensor/Transducer
2 Drain valve
3 Safety valve
4 Hydraulic manifold
5 Pump
6 Bottom auto air vent (AAV)
7 Injector
8 Transformer
9 Condense trap
10 Return sensor
11 Flue gas analysis test point
12 Flue outlet & air intake
13 Ignition transformer
14 Top AAv
15 Flow sensor
16 Spark/Sensing Electrode
17 Cylindric Burner
18 Condensate level sensor
19 Main Heat Exchanger
20 Fan Assembly
21 Mixer
22 Expansion Vessel
23 Hydrometer
24 Gas valve
25 Condensing drain

R Heating return connection
F Heating flow connection
G Gas connection

fig. 1A:

1= heating temperature control
2= ON/OFF/RESET button
3= MODE button
4= INFO button

Symbols description

Economy

Comfort

Heating temperature bar

Temporary fault indicator

Reset

Current water pressure

Outside sensor

Current appliance temperature

Error code

Current mode of operation

Burner on

Frost protection on

1.1 PRINCIPLE COMPONENTS

- A fully integrated electronic control board featuring electronic temperature control, anti-cycle control, pump over-run, self-diagnostic fault indicator, full air/gas modulation.
- Radial aluminium heat exchanger.
- Electronic ignition with flame supervision.
- Integral high-head pump.
- Fan.
- Expansion vessel.
- Water pressure switch.
- Condensate level sensor.
- Pressure gauge.
- Safety valve.

1.2 MODE OF OPERATION (at rest)

When the appliance is at rest and there are no requests for heating or hot water, the following functions are active:

- 2-stage frost-protection system: the frost-protection system protects the appliance against the risk of frost damage. The first stage enables activation of the pump should the temperature of the appliance fall to 7°C. The second stage becomes active when the temperature has dropped to 3°C. Should the second stage become active, the appliance will function on minimum power until it reaches 30°C.
- Anti-block function: the anti-block function enables the pump to be energised for short periods, when the appliance has been inactive for more than 19-hours.

1.3 MODE OF OPERATION

When there is a request for heat and/or hot water, via the programmer/time clock and/or any external control, the pump and fan are started, the fan speed will modulate until the correct signal voltage is received at the control PCB. At this point an ignition sequence is enabled.

Ignition is sensed by the electronic circuitry to ensure flame stability at the burner. Once successful ignition has been achieved, the electronic circuitry increases the gas rate to 75% for a period of 15 minutes. Thereafter, the boiler's output will either be increase to maximum or modulate to suit the set requirement.

When the appliance reaches the desired temperature the burner will shut down and the boiler will perform a three-minute anti-cycle (timer delay).

When the request for heat has been satisfied the appliance pump and fan may continue to operate to dissipate any residual heat within the appliance.

1.4 SAFETY DEVICES

When the appliance is in use, safe operation is ensured by:

- a water pressure switch that monitors system water pressure and will de-activate the pump, fan and burner should the system water pressure drop below the rated tolerance.
- fan speed sensor and pressure differential mechanism to ensure safe operation of the burner
- a high limit thermostat that over-rides the temperature control circuit to prevent or interrupt the operation of the burner
- a sensor that interrupts the operation of the appliance if the condense pipe becomes blocked
- a safety valve which releases excess pressure from the primary circuit.

ECONOMY/COMFORT MODES

The boiler can be used in either comfort or economy mode. When the economy mode has been selected, the automatic temperature control (SARA) functions over a reduced temperature range. When the comfort mode is selected, the SARA function is active throughout the entire temperature range.

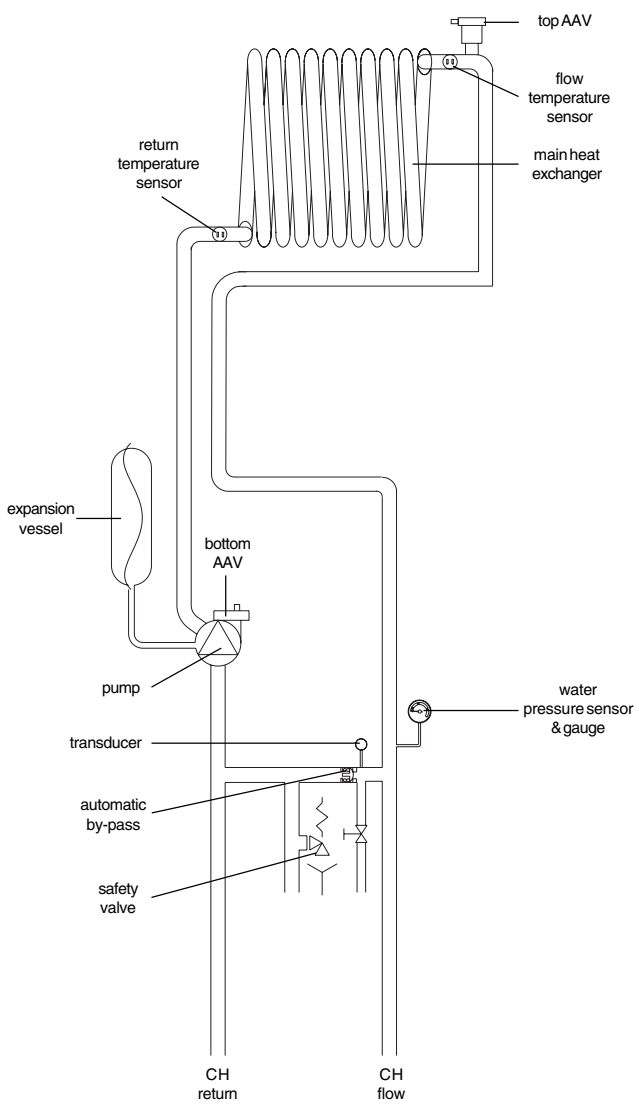

Fig. 2

SECTION 2 TECHNICAL DATA

2.1 Central Heating	Mynute 35HE
Heat input (kW)	34.60
Maximum heat output @ 60/80 °C (kW)	33.74
Maximum heat output @ 30/50 °C (kW)	36.75
Minimum heat output @ 60/80 °C (kW)	6.88
Minimum heat output @ 30/50 °C (kW)	7.55
Minimum working pressure	0.5 bar
Maximum working pressure	3 bar
Minimum flow rate	350 l/h
2.2 Gas Pressures	
Inlet pressure (G20)	20.0 mbar
Maximum gas rate (m^3/hr)	3.66
Minimum gas rate (m^3/hr)	0.74
Injector size	7.0mm
Fan speed @ max output (rpm)	6.000
Fan speed @ min output (rpm)	1.400
2.3 Expansion Vessel	
Capacity	10 litres
Maximum system volume	91 litres
Pre-charge pressure	1.0 bar
2.4 Dimensions	
Height	845 mm
Width	453 mm
Depth	359 mm
Dry weight (Kg)	43.0
2.5 Clearances	
Sides	12 mm
Top	150 mm from casing or 25 mm above flue elbow (whichever is applicable)
Bottom	150 mm
Front	600 mm
2.6 Connections	
Flow & return	22 mm
Gas	15 mm
Safety valve	15 mm
Condense	21 mm
2.7 Electrical	
Voltage (V/Hz)	230/50hz
Power consumption (W)	175
Internal fuse	2A
External fuse	3A
2.8 Flue details (concentric)	
Maximum horizontal flue length (60/100mm)	7.80m
Maximum vertical flue length (60/100mm)	8.80m
Maximum horizontal flue length (80/125mm)	28.0m
Maximum vertical flue length (80/125mm)	28.0m
2.8A Flue details (twin pipes)	
Maximum horizontal flue length (80mm+80mm)	50m+50m
Maximum vertical flue length (80mm+80mm)	50m+50m
2.9 Efficiency	
SEDBUK (%)	90.03 (A)
NOx class	5
2.10 Emissions	
NOx (max-min)	123.5/105.9 mg/kWh
CO (max-min)	193.5/43 mg/kWh
CO_2 (max-min)	9.0 - 9.0 %
CO/CO_2 ratio (max)	0.002 to 1
CO/CO_2 ratio (min)	0.0004 to 1

Ref. Condition 15 °C, 1013,25 mbar, dry gas
NOTE: L.P.G. data refer to section 10

2.11 PUMP DUTY

Fig. 3 shows the flow rate available - after allowing for pressure loss through the appliance - for system requirements. When using this graph apply only the pressure loss of the system. The graph is based on 20 °C temperature differential.

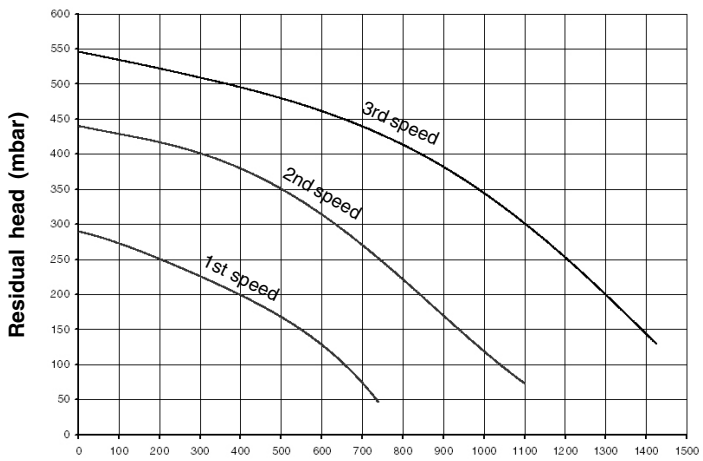

Fig. 3

SECTION 3 GENERAL REQUIREMENTS (UK)

Fig. 4

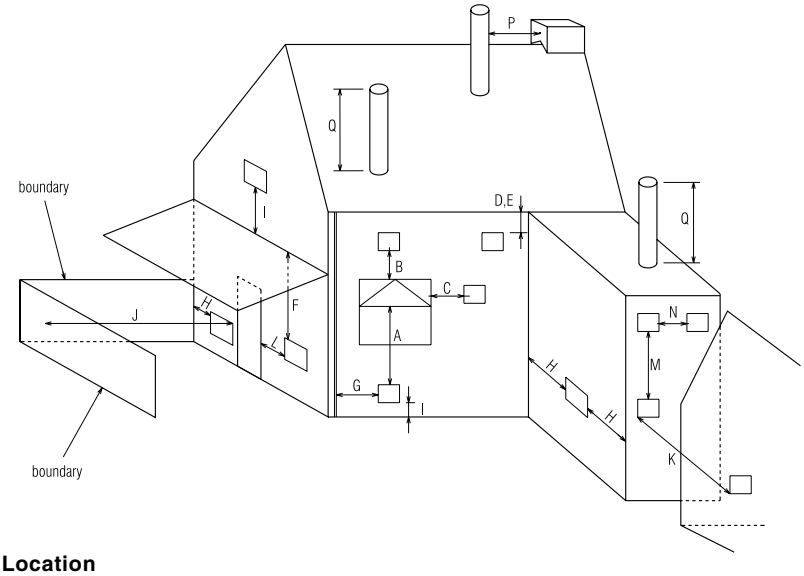

Key	Location	Minimum distance
A	Below an opening (window, air-brick, etc.)	300 mm
B	Above an opening (window, air-brick, etc.)	300 mm
C	To the side of an opening (window, air-brick, etc.)	500 mm
D	Below gutter, drain-pipe, etc.	75 mm
E	Below eaves	200 mm
F	Below balcony, car-port roof, etc.	1200 mm
G	To the side of a soil/drain-pipe, etc.	150 mm
H	From internal/external corner or boundary	300 mm
I	Above ground, roof, or balcony level	300 mm
J	From a surface or boundary facing the terminal	1200 mm
K	From a terminal facing a terminal	1200 mm
L	From an opening in the car-port into the building	1200 mm
M	Vertically from a terminal on the same wall	1500 mm
N	Horizontally from a terminal on the same wall	300 mm
P	From a structure to the side of the vertical terminal	500 mm
Q	From the top of the vertical terminal to the roof flashing	As determined by the fixed collar of the vertical terminal

This appliance must be installed by a competent person in accordance with the Gas Safety (Installation & Use) Regulations.

3.1 RELATED DOCUMENTS

The installation of this boiler must be in accordance with the relevant requirements of the Gas Safety (Installation & Use) Regulations, the local building regulations, the current I.E.E. wiring regulations, the bylaws of the local water undertaking, the Building Standards (Scotland) Regulation and Building Standards (Northern Ireland) Regulations.

It should be in accordance also with any relevant requirements of the local authority and the relevant recommendations of the following British Standard Codes of Practice.

3.2 LOCATION OF APPLIANCE

The appliance may be installed in any room or internal space, although particular attention is drawn to the requirements of the current I.E.E. wiring regulations, and in Scotland, the electrical provisions of the Building Regulations, with respect to the installation of the appliance in a room

or internal space containing a bath or shower.
When an appliance is installed in a room or internal space containing a bath or shower, the appliance or any control pertaining to it must not be within reach of a person using the bath or shower.
The location chosen for the appliance must permit the provision of a safe and satisfactory flue and termination. The location must also permit an adequate air supply for combustion purposes and an adequate space for servicing and air circulation around the appliance.
Where the installation of the appliance will be in an unusual location special procedures may be necessary, BS 6798 gives detailed guidance on this aspect.
A compartment used to enclose the appliance must be designed and constructed specifically for this purpose. An existing compartment/cupboard may be utilised provided that it is modified to suit. Details of essential features of compartment/ cupboard design including airing cupboard installations are given in BS 6798. This appliance is not suitable for external installation.

3.3 GAS SUPPLY

The gas meter - as supplied by the gas supplier - must be checked to ensure that it is of adequate size to deal with the maximum rated input of all the appliances that it serves. Installation pipes must be fitted in accordance with BS 6891.
Pipe work from the meter to the appliance must be of adequate size. Pipes of a smaller size than the appliance gas inlet connection must not be used. The installation must be tested for soundness in accordance with BS6891.
If the gas supply serves more than one appliance, it must be ensured that an adequate supply is maintained to each appliance when they are in use at the same time.

3.4 FLUE SYSTEM

The terminal should be located where the dispersal of combustion products is not impeded and with due regard for the damage and discoloration that may occur to building products located nearby. The terminal must not be located in a place where it is likely to cause a nuisance (see fig. 4).
In cold and/or humid weather, water vapour will condense on leaving the terminal; the effect of such pluming must be considered.
If installed less than 2m above a pavement or platform to which people have access (including balconies or flat roofs) the terminal must be protected by a guard of durable material. The guard must be fitted centrally over the terminal. Refer to BS 5440 Part 1, when the terminal is 0.5 metres (or less) below plastic guttering or 1 metre (or less) below painted eaves.

3.5 AIR SUPPLY

The following notes are intended for general guidance only. This appliance is a room-sealed, fan-flued boiler, consequently it does not require a permanent air vent for combustion air supply. When installed in a cupboard or compartment, ventilation for cooling purposes is also not required.

3.6 WATER CIRCULATION

Detailed recommendations are given in BS 5449 Part 1 and BS 6798. The following notes are for general guidance only.

3.6.1 PIPEWORK

It is recommended that copper tubing to BS 2871 Part 1 is used in conjunction with soldered capillary joints.
Where possible pipes should have a gradient to ensure air is carried naturally to air release points and that water flows naturally to drain cocks.
Except where providing useful heat, pipes should be insulated to avoid heat loss and in particular to avoid the possibility of freezing. Particular attention should be paid to pipes passing through ventilated areas such as under floors, loft space and void areas.

3.6.2 AUTOMATIC BY-PASS

The appliance has a built-in automatic by-pass, consequently there is no requirement for an external by-pass, however the design of the system should be such that it prevents boiler ‘cycling’.

3.6.3 DRAIN COCKS

These must be located in accessible positions to facilitate draining of the appliance and all water pipes connected to the appliance. The drain cocks must be manufactured in accordance with BS 2879.

3.6.4 AIR RELEASE POINTS

These must be positioned at the highest points in the system where air is likely to be trapped. They should be used to expel trapped air and allow complete filling of the system.

3.6.5 EXPANSION VESSEL

The appliance has an integral expansion vessel to accommodate the increased volume of water when the system is heated. It can accept up to 10 litres of expansion from within the system, generally this is sufficient, however if the system has an unusually high water content, it may be necessary to provide additional expansion capacity (see 6.19).

BS 5440	**PART 1**	**FLUES**
BS 5440	**PART 2**	**FLUES & VENTILATION**
BS 5449	**PART 1**	**FORCED CIRCULATION HOT WATER SYSTEMS**
BS 6798		**INSTALLATION OF BOILERS OF RATED INPUT NOT EXCEEDING 60kW**
BS 6891		**LOW PRESSURE INSTALLATION PIPES**
BS 7074	**PART 1**	**APPLICATION, SELECTION AND INSTALLATION OF EXPANSION VESSELS AND ANCILLARY EQUIPMENT FOR SEALED WATER SYSTEMS**

3.6.6 FILLING POINT

A method for initial filling of the system and replacing water lost during servicing etc. is required (see fig. 5). This method of filling must comply with the current Water Supply (Water Fittings) Regulations 1999 and Water Bylaws 2000 (Scotland).

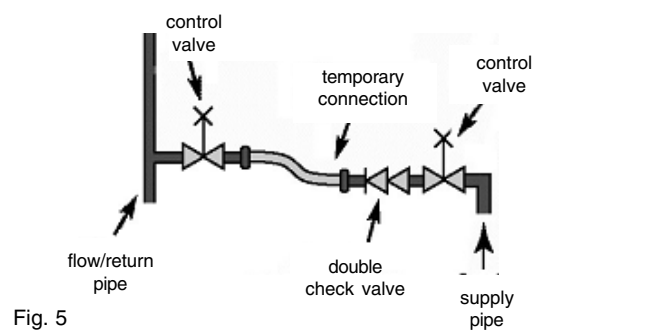

Fig. 5

3.6.7 LOW PRESSURE SEALED SYSTEM

An alternative method of filling the system would be from an independent make-up vessel or tank mounted in a position at least 1 metre above the highest point in the system and at least 5 metres above the boiler (see fig. 5A).

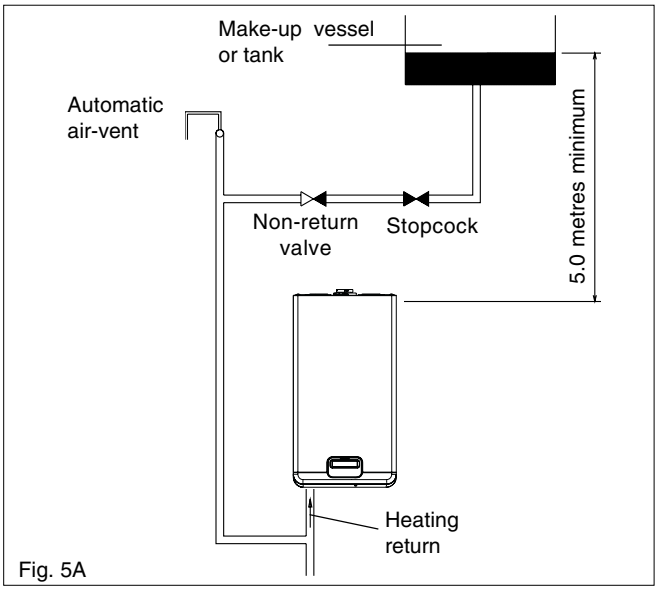

Fig. 5A

The cold feed from the make-up vessel or tank must be fitted with an approved non-return valve and stopcock for isolation purposes. The feed pipe should be connected to the return pipe as close to the boiler as possible.

3.6.8 FREQUENT FILLING

Frequent filling or venting of the system may be indicative of a leak. Care should be taken during the installation of the appliance to ensure all aspects of the system are capable of withstanding pressures up to at least 3 bar.

3.7 ELECTRICAL SUPPLY

The appliance is supplied for operation on 230V @ 50Hz electrical supply; it must be protected with a 3-amp fuse. The method of connection to the mains electricity supply must allow for complete isolation from the supply. The preferred method is by using a double-pole switch with a contact separation of at least 3mm. The switch must only supply the appliance and its corresponding controls, i.e. time clock, room thermostat, etc. Alternatively an un-switched shuttered socket with a fused 3-pin plug both complying with BS 1363 is acceptable.

3.8 MOUNTING ON A COMBUSTIBLE SURFACE

If the appliance is to be fitted on a wall of combustible material, a sheet of fireproof material must protect the wall.

3.9 TIMBER FRAMED BUILDINGS

If the appliance is to be fitted in a timber framed building, it should be fitted in accordance with the Institute of Gas Engineers publication (IGE/UP/7) 'Guide for Gas Installations in Timber Frame Buildings'.

3.10 INHIBITORS

Vokera recommend that an inhibitor - suitable for use with copper and aluminium heat exchangers - is used to protect the boiler and system from the effects of corrosion and/or electrolytic action. The inhibitor must be administered in strict accordance with the manufacturers instructions*.

*Water treatment of the complete heating system - including the boiler - should be carried out in accordance with BS 7593 and the Domestic Water Treatment Association's (DWTA) code of practice.

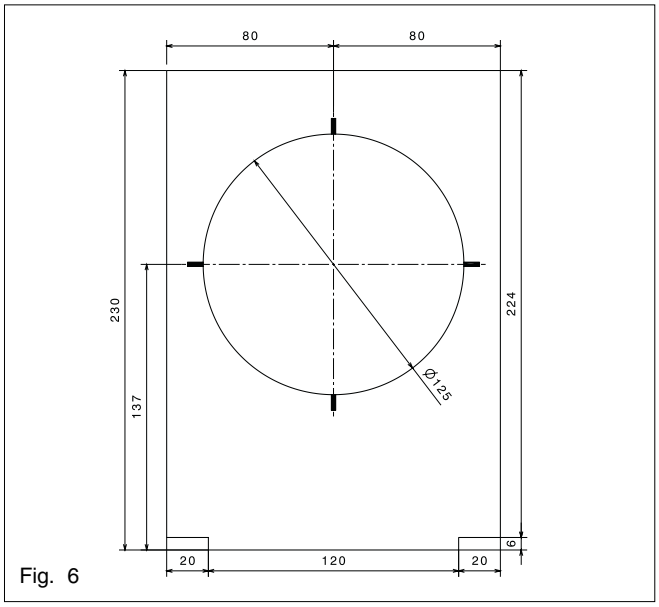

Fig. 6

Fig. 6A

Fig. 6B

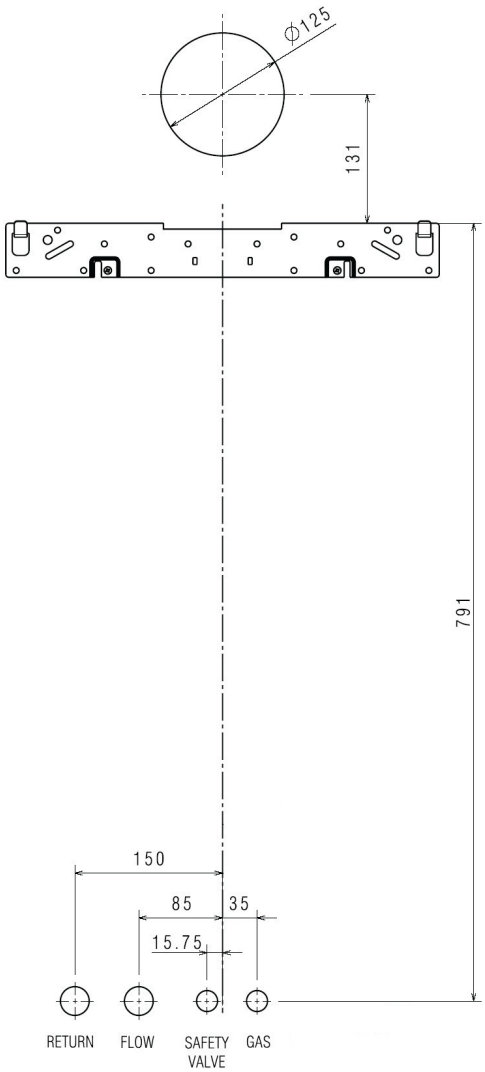

SECTION 3A GENERAL REQUIREMENTS (EIRE)

This appliance must be installed by a competent person in accordance with and defined by, the Standard Specification (Domestic Gas Installations) Declaration (I.S. 813).

3A.1 RELATED DOCUMENTS

The installation of this boiler must be in accordance with the relevant requirements of the local building regulations, the current ETCI National Rules for Electrical Installations, and the bylaws of the local water undertaking.

It should be in accordance also with any relevant requirements of the local and/or district authority.

3A.2 LOCATION OF APPLIANCE

The appliance may be installed in any room or internal space, although particular attention is drawn to the requirements of the current ETCI National Rules for Electrical Installations, and I.S. 813, Annex K.

When an appliance is installed in a room or internal space containing a bath or shower, the appliance or any control pertaining to it must not be within reach of a person using the bath or shower.

The location chosen for the appliance must permit the provision of a safe and satisfactory flue and termination. The location must also permit an adequate air supply for combustion purposes and an adequate space for servicing and air circulation around the appliance. Where the installation of the appliance will be in an unusual location special procedures may be necessary, refer to I.S. 813 for detailed guidance on this aspect. A compartment used to enclose the appliance must be designed and constructed specifically for this purpose. An existing compartment/cupboard may be utilised provided that it is modified to suit. This appliance is not suitable for external installation.

3A.3 GAS SUPPLY

The gas meter - as supplied by the gas supplier - must be checked to ensure that it is of adequate size to deal with the maximum rated input of all the appliances that it serves. Installation pipes must be fitted in accordance with I.S. 813.

Pipe work from the meter to the appliance must be of adequate size. Pipes of a smaller size than the appliance gas inlet connection must not be used. The installation must be tested for soundness in accordance with I.S. 813.

If the gas supply serves more than one appliance, it must be ensured that an adequate supply is maintained to each appliance when they are in use at the same time.

3A.4 FLUE SYSTEM

The terminal should be located where the dispersal of combustion products is not impeded and with due regard for the damage and discoloration that may occur to building products located nearby. The terminal must not be located in a place where it is likely to cause a nuisance (see I.S. 813). In cold and/or humid weather, water vapour will condense on leaving the terminal; the effect of such pluming must be considered. If installed less than 2m above a pavement or platform to which people have access (including balconies or flat roofs) the terminal must be protected by a guard of durable material. The guard must be fitted centrally over the terminal. Refer to I.S. 813, when the terminal is 0.5 metres (or less) below plastic guttering or 1 metre (or less) below painted eaves.

3A.5 AIR SUPPLY

The following notes are intended for general guidance only. This appliance is a room-sealed, fan-flued boiler, consequently it does not require a permanent air vent for combustion air supply. When installed in a cupboard or compartment, ventilation for cooling purposes is also not required.

3A.6 WATER CIRCULATION

Specific recommendations are given in I.S. 813. The following notes are for general guidance only.

3A.6.1 PIPEWORK

It is recommended that copper tubing be used in conjunction with soldered capillary joints.

Where possible pipes should have a gradient to ensure air is carried naturally to air release points and that water flows naturally to drain cocks.

Except where providing useful heat, pipes should be insulated to avoid heat loss and in particular to avoid the possibility of freezing. Particular attention should be paid to pipes passing through ventilated areas such as under floors, loft space and void areas.

3A.6.2 AUTOMATIC BY-PASS

The appliance has a built-in automatic by-pass, consequently there is no requirement for an external by-pass, however the design of the system should be such that it prevents boiler 'cycling'.

3A.6.3 DRAIN COCKS

These must be located in accessible positions to facilitate draining of the appliance and all water pipes connected to the appliance.

3A.6.4 AIR RELEASE POINTS

These must be positioned at the highest points in the system where air is likely to be trapped. They should be used to expel trapped air and allow complete filling of the system.

3A.6.5 EXPANSION VESSEL

The appliance has an integral expansion vessel to accommodate the increased volume of water when the system is heated. It can accept up to 10 litres of expansion from within the system, generally this is sufficient, however if the system has an unusually high water content, it may be necessary to provide additional expansion capacity (see 6.19).

3A.6.6 FILLING POINT

A method for initial filling of the system and replacing water lost during servicing etc. is required (see fig. 14). You should ensure this method of filling complies with the local water authority regulations.

3A.6.7 LOW PRESSURE SEALED SYSTEM

An alternative method of filling the system would be from an independent make-up vessel or tank mounted in a position at least 1 metre above the highest point in the system and at least 5 metres above the boiler (see fig. 5).

The cold feed from the make-up vessel or tank must be fitted with an approved non-return valve and stopcock for isolation purposes. The feed pipe should be connected to the return pipe as close to the boiler as possible.

3A.6.8 FREQUENT FILLING

Frequent filling or venting of the system may be indicative of a leak. Care should be taken during the installation of the appliance to ensure all aspects of the system are capable of withstanding pressures up to at least 3 bar.

3A.7 ELECTRICAL SUPPLY

The appliance is supplied for operation on 230V @ 50Hz electrical supply; it must be protected with a 3-amp fuse. The method of connection to the mains electricity supply must allow for complete isolation from the supply. The preferred method is by using a double-pole switch with a contact separation of at least 3mm. The switch must only supply the appliance and its corresponding controls, i.e. time clock, room thermostat, etc.

3A.8 MOUNTING ON A COMBUSTIBLE SURFACE

If the appliance is to be fitted on a wall of combustible material, a sheet of fireproof material must protect the wall.

3A.9 TIMBER FRAMED BUILDINGS

If the appliance is to be fitted in a timber framed building, it should be fitted in accordance with I.S. 813 and local Building Regulations.

The Institute of Gas Engineers publication (IGE/UP/7) 'Guide for Gas Installations in Timber Frame Buildings' gives specific advice on this type of installation.

3A.10 INHIBITORS use new text here!!!

Vokera recommend that an inhibitor - suitable for use with copper and aluminium heat exchangers - is used to protect the boiler and system from the effects of corrosion and/or electrolytic action. The inhibitor must be administered in strict accordance with the manufacturers instructions*.

*Water treatment of the complete heating system - including the boiler - should be carried out in accordance with I.S. 813 and the Domestic Water Treatment Association's (DWTA) code of practice.

3A.11 DECLARATION OF CONFORMITY

A Declaration of Conformity (as defined in I.S. 813) must be provided on completion of the installation.

A copy of the declaration must be given to the responsible person and also to the gas supplier if required.

4.1 DELIVERY

Due to the weight of the appliance it may be necessary for two people to lift and attach the appliance to its mounting. The appliance is contained within a heavy-duty cardboard carton. Lay the carton on the floor with the writing the correct way up.

4.2 CONTENTS

Contained within the carton is:

- the boiler;
- the wall bracket;
- template;
- an accessories pack containing appliance service connections and washers;
- the instruction pack containing the installation & servicing instructions, user instructions, guarantee registration card, and a 3-amp fuse.

4.3 UNPACKING

At the top of the carton pull both sides open - do not use a knife - unfold the rest of the carton from around the appliance, carefully remove all protective packaging from the appliance, and lay the accessories etc. to one sidee. Protective gloves should be used to lift the appliance, the appliance back-frame should be used for lifting points.

4.4 PREPARATION FOR MOUNTING THE APPLIANCE

The appliance should be mounted on a smooth, vertical, non-combustible surface, which must be capable of supporting the full weight of the appliance. Care should be exercised when determining the position of the appliance with respect to hidden obstructions such as pipes, cables, etc.

When the position of the appliance has been decided - using the template supplied - carefully mark the position of the wall- mounting bracket (see fig. 6) and flue-hole (if applicable).

4.5 FITTING THE FLUE

The top flue outlet permits both horizontal and vertical flue applications to be considered, alternatively, the Vokera twin flue system can be utilised if longer flue runs are required.

4.5.1 CONCENTRIC HORIZONTAL FLUE

(For concentric vertical flue, see 4.5.2).
(For twin flue applications, see 4.5.3).

The appliance can be used with either the Vokera condensing 60/100mm concentric flue system or the optional 80/125mm concentric flue system.

NOTE

These instructions relate **only** to the Vokera condensing 60/100mm concentric flue system. For specific details on the installation of the 80/125mm concentric flue system please refer to the instructions supplied.

The appliance flue outlet elbow can be rotated through 360° on its vertical axis. In addition the flue may be extended from the outlet elbow in the horizontal plane (see 2.9). A reduction must also be made to the maximum length (see table below) when additional bends are used.

Reduction for additional bends

Bend	Reduction in maximum flue length for each bend
45° bend	0.5 metre
90° bend	1.0 metre

Horizontal flue terminals and accessories

Part No.	Description	Min-Max length
0225720	Horizontal flue kit for use with add. bends & extensions	1000 mm
0225755	Telescopic extension	350 mm-500 mm
0225740	0.5 m extension	500 mm
0225745	1.0 m extension	1000 mm
0225750	2.0 m extension	2000 mm
0225730	45° bend (pair)	N/A
0225735	90° bend	N/A
0225760	Wall bracket (5)	N/A

Using the template provided, mark and drill a 125mm hole for the passage of the flue pipe. The hole should be drilled level to ensure any condense fluid that forms, is allowed to drain back to the appliance.

The fixing holes for the wall-mounting bracket should now be drilled and plugged, an appropriate type and quantity of fixing should be used to ensure that the bracket is mounted securely. Once the bracket has been secured to the wall, mount the appliance onto the bracket.

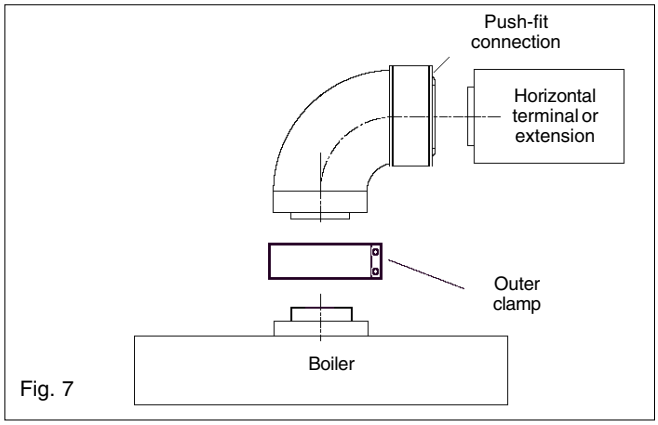

Fig. 7

FITTING THE HORIZONTAL FLUE KIT

Carefully measure the distance from the centre of the appliance flue outlet to the edge of the finished outside wall (dimension **X**). Add 45mm to dimension **X** to give you dimension **Y** (see fig 7A). Measure dimension **Y** from the terminal end of the concentric flue pipe and cut off the excess ensuring any burrs are removed. Pass the concentric flue pipe through the previously drilled hole. Fit the flue bend to the boiler flue outlet and insert the concentric flue pipe into the flue bend ensuring the correct seal is made.

Using the clamp, gasket and screws supplied, secure the flue bend to the appliance flue spigot. The 60mm M & F adaptor (supplied with the flue kit) should be discarded.

NOTE

Fit the internal trim to the flue assembly prior to connecting the flue pipe to the bend.
You must ensure that the entire flue system is properly supported and connected.
Seal the flue assembly to the wall using cement or a suitable alternative that will provide satisfactory weatherproofing.
The exterior trim can now be fitted.

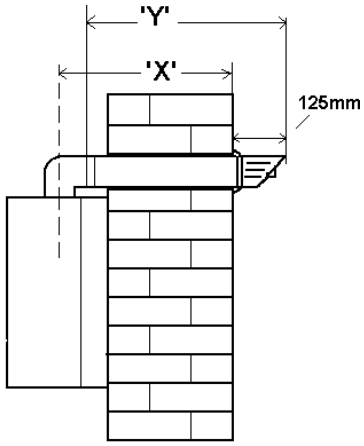

Fig. 7A "**Y**" = "**X**" + 45 mm

4.5.1.1 EXTENDING THE FLUE

Connect the bend - supplied with the terminal kit - to the top of the boiler using clamp (supplied) see fig. 7. The additional bends & extensions have push-fit connections, care should be taken to ensure that the correct seal is made when assembling the flue system. Connect the required number of flue extensions or bends (up to the maximum equivalent flue length) to the flue terminal (see fig. 7 & 8).
The flue system should have a 1° rise from the boiler to outside, to ensure any condense fluid that forms, is allowed to drain back to the appliance.

NOTE

When cutting an extension to the required length, you must ensure that the excess is cut from the plain end of the extension (see fig. 7 & 8). Remove any burrs, and check that all seals are located properly.
You must ensure that the entire flue system is properly supported and connected.
eal the flue assembly to the wall using cement or a suitable alternative that will provide satisfactory weatherproofing. The interior and exterior trim can now be fitted.

4.5.2 CONCENTRIC VERTICAL FLUE

The appliance can be used with either the Vokera condensing 60/100mm concentric flue system or the optional 80/125mm concentric flue system.

NOTE

These instructions relate **only** to the Vokera condensing 60/100mm concentric flue system. For specific details on the installation of the 80/125mm concentric flue system please refer to the instructions supplied.

The vertical flue terminal can be connected directly to the appliance flue outlet. Alternatively, an extension or bend can be connected to the appliance flue outlet if desired (see 4.4.2), however if additional bends are fitted, a reduction must be made to the maximum flue length (see table below).

Reduction for bends

Bend	Reduction in maximum flue length for each bend
45° bend	0.5 metre
90° bend	1.0 metre

Vertical flue terminal and accessories

Part No.	Description	Min-Max length
0225725	Vertical flue terminal	1.0 metre
0225770	Pitched roof flashing plate	N/A
0225765	Flat roof flashing plate	N/A
0225755	350-500 telescopic extension	350 mm-500 mm
0225740	500 mm extension	500 mm
0225745	1000 mm extension	1000 mm
0225750	2000 mm extension	2000 mm
0225730	45° bend (pair)	N/A
0225735	90° bend	N/A
0225760	Wall bracket (4)	N/A

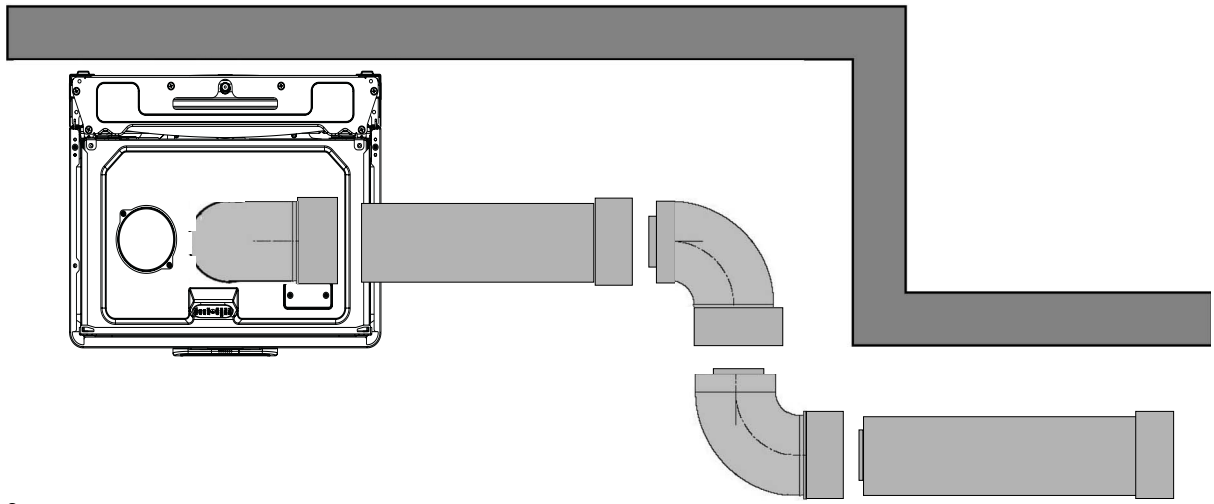

Fig. 8

Using the dimensions given in fig. 9 as a reference, mark and cut a 115mm hole in the ceiling and/or roof.

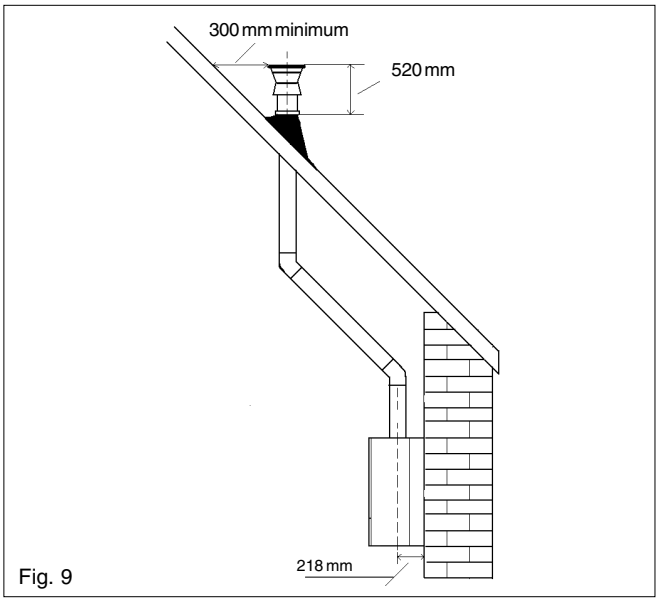

Fig. 9

Fit the appropriate flashing plate to the roof and insert the vertical flue terminal through the flashing plate from the outside, ensuring that the collar on the flue terminal fits over the flashing.
The fixing holes for the wall-mounting bracket should now be drilled and plugged, an appropriate type and quantity of fixing should be used to ensure that the bracket is mounted securely. Once the bracket has been secured to the wall, mount the appliance onto the bracket.

IMPORTANT
The vertical flue terminal is 1.0 metre in length and cannot be cut; therefore it may be necessary to adjust the height of the appliance to suit or use a suitable extension.
Connect the vertical flue assembly to the boiler flue spigot using the 60mm & 100mm clips, gaskets & screws (supplied), ensuring the correct seal is made. The flue support bracket (supplied with the vertical flue kit) can now be fitted.
If the vertical flue requires extension/s or additional bend/s, connect the required number of flue extensions or bends (up to the maximum equivalent flue length) between the boiler and vertical flue assembly (see fig. 8).
Ensure that any horizontal sections of the flue system have a 1° fall back to the boiler (17mm per 1000mm).

NOTE
When cutting an extension to the required length, you must ensure that the excess is cut from the plain end of the extension (see fig. 8). Remove any burrs, and check that any seals are located properly.
You must ensure that the entire flue system is properly supported and connected.

4.5.3 TWIN FLUE SYSTEM

The Vokera twin flue system enables greater flue distances to be achieved (see 4.4.2) than that of a concentric flue system. It can be used for horizontal or vertical applications, however the twin flue system must be converted to the dedicated concentric flue kit for termination. It is essential that the installation of the twin flue system be carried out in strict accordance with these instructions.

GUIDANCE NOTES ON TWIN FLUE INSTALLATION

- The flue must have a fall back of 1° back to the appliance to allow any condensate that may form in the flue system to drain via the condensate drain. Consideration must also be given to the fact that there is the possibility of a small amount of condensate dripping from the terminal.
- Ensure that the entire flue system is adequately supported, use at least one bracket for each extension.
- The entire flue system must be adequately insulated to maintain heat within the flue system thereby reducing the possibility of condensate production.
- As the exhaust outlet pipe can reach very high temperatures it must be protected to prevent persons touching the hot surface.
- The condensate drain pipe must be connected in accordance with building regulations.

Reduction for bends

Bend	Reduction in maximum flue length for each bend
45° bend	1.0 metre
90° bend	1.0 metre

Twin flue accessories

Part No.	Description	Length
0225805	Horizontal flue terminal	1.0 metre
0225810	Vertical flue terminal	1.0 metre
359	Twin adapter kit	N/A
0225770	Pitched roof flashing plate	N/A
0225765	Flat roof flashing plate	N/A
0225815	Condensate drain kit	N/A
0225820	0.25 m extension (pair)	250 mm
0225825	0.5 m extension (pair)	500 mm
0225830	1.0 m extension (pair)	1000 mm
0225835	2.0 m extension (pair)	2000 mm
0225840	45° bend (pair)	N/A
0225845	90° bend (pair)	N/A
0225850	Twin bracket (5)	N/A
0225855	Single bracket (5)	N/A

MOUNTING THE BOILER
The fixing holes for the wall-mounting bracket should now be drilled and plugged, an appropriate type and quantity of fixing should be used to ensure that the bracket is mounted securely. Once the bracket has been secured to the wall, mount the appliance onto the bracket.

4.5.3.1 INSTALLATION OF TWIN ADAPTOR KIT (fig. 10 & 11)

- Insert the exhaust connection manifold (**A**) onto the appliance flue outlet.

- Remove the blanking plate (located to the right of the appliance flue outlet) and - using the same screws - install the air inlet plate (**B**).
- Using the hole in the exhaust connection manifold as a guide, drill a 3mm hole in the appliance flue spigot and secure the exhaust manifold connection to the flue spigot using the screw provided (**C**).
- Using the two holes in the air inlet plate as a guide, drill a 3mm hole in each and secure the air inlet pipe/bend using the screws provided.
- The twin flue pipes extensions and accessories can now be installed by pushing together (the plain end of each extension or bend should be pushed approximately 50mm into the female socket of the previous piece).

Fig. 10

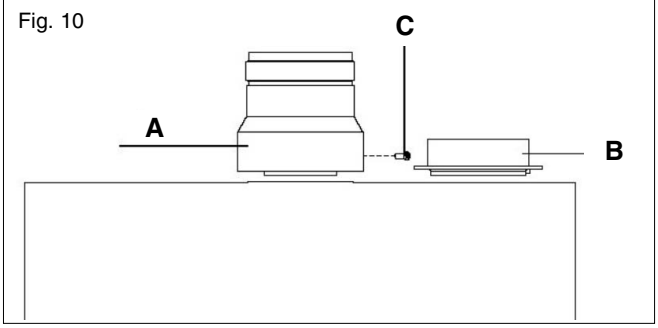

Fig. 11

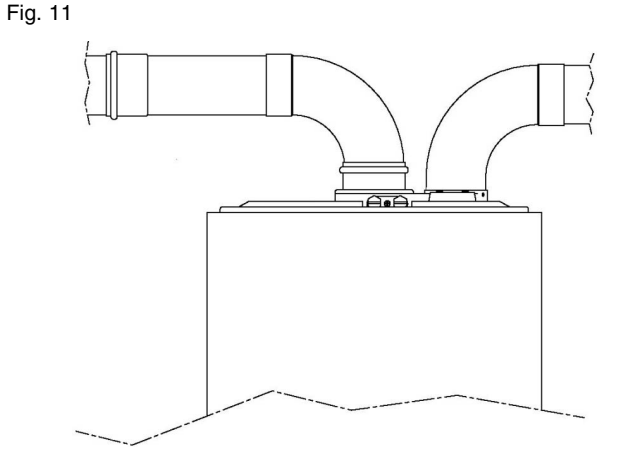

4.5.3.2 HORIZONTAL TERMINATION (see fig. 12)

The twin flue system must be converted to the dedicated concentric flue kit for termination.

- The horizontal terminal is supplied with a built-in converter box and cannot be shortened.
- A 130mm hole is required for the passage of the concentric terminal through the wall.
- The air inlet pipe must always be level with or below, that of the exhaust pipe.

Depending on site conditions it may be preferable to install the terminal assembly prior to fitting the twin flue pipes.

Mark and drill a level 130mm hole for the passage of the horizontal flue terminal. Insert the terminal assembly into the flue hole.

Push-fit the twin flue pipes onto the concentric to twin converter box ensuring that the exhaust pipe connects to the exhaust connection on the concentric to twin converter.

If necessary cut the plain ends (male) of the twin flue pipes to allow connection to the concentric to twin converter.

NOTE

Before cutting twin flue pipes ensure allowances have been made for connection onto the previous piece and onto the concentric to twin converter. The last twin flue pipes must be pushed 50mm onto the male spigots of the concentric to twin converter.

NOTE

Seal the flue terminal assembly to the wall using cement or a suitable alternative that will provide satisfactory weatherproofing. The interior and exterior trim can now be fitted.

4.5.3.3 VERTICAL TERMINATION (see fig. 13)

The twin flue system must be converted to the dedicated concentric flue kit for termination.

- The vertical terminal is supplied with a built-in converter box and cannot be shortened.
- A 130mm hole is required for the passage of the concentric terminal through the ceiling and/or roof.

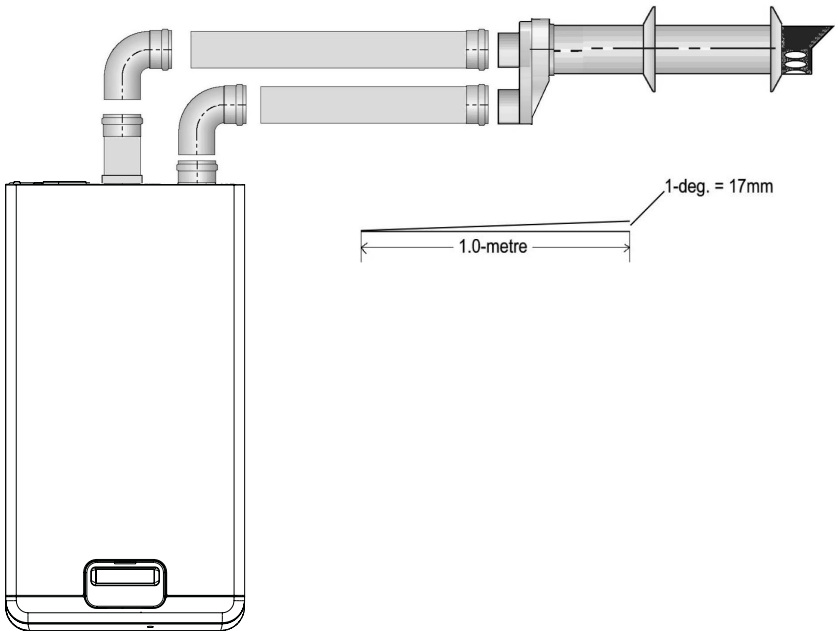

Fig. 12

Depending on site conditions it may be preferable to install the terminal assembly prior to fitting the twin flue pipes.
Fit the appropriate flashing plate to the roof and insert the vertical flue terminal through the flashing plate from the outside, ensuring that the collar on the flue terminal fits over the flashing.
Push-fit the twin flue pipes onto the concentric to twin converter ensuring that the exhaust pipe connects to the exhaust connection on the concentric to twin converter.
If necessary cut the plain ends (male) of the twin flue pipes to allow connection to the concentric to twin converter.

NOTE

- Before cutting twin flue pipes ensure allowances have been made for connection onto the previous piece and onto the concentric to twin converter. The last twin flue pipes must be pushed 50mm onto the male spigots of the concentric to twin converter.

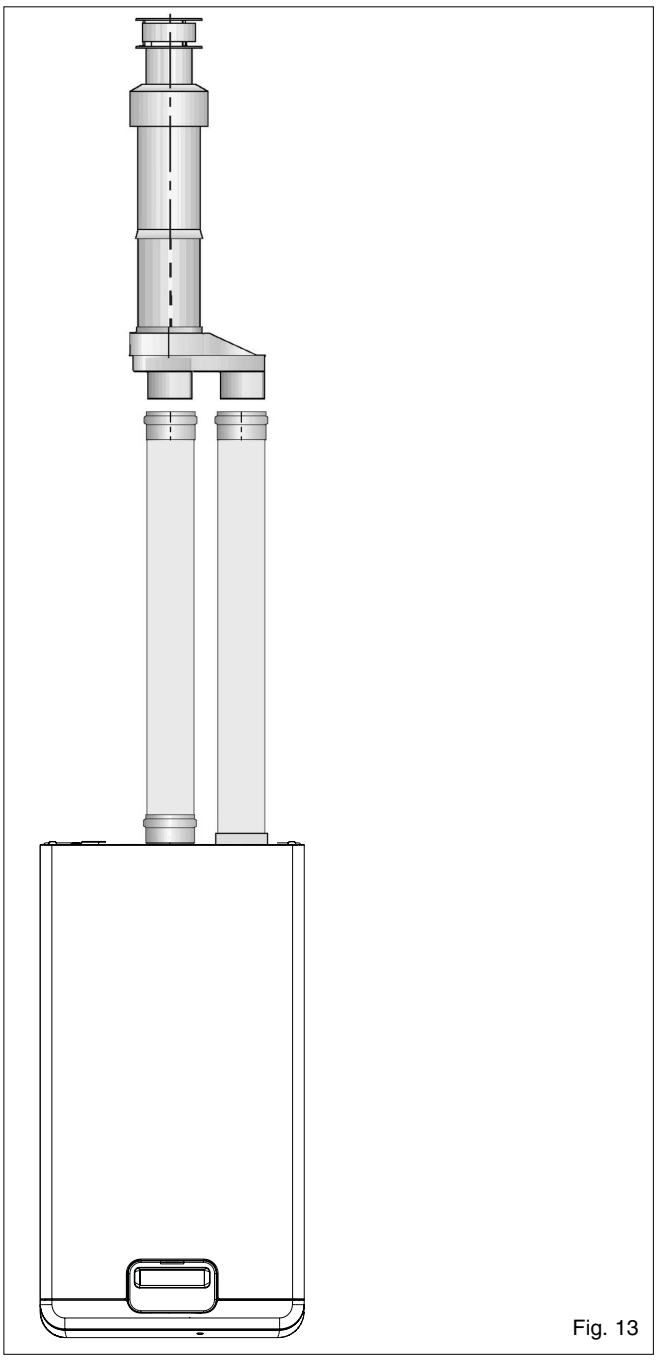

Fig. 13

- You must ensure that the entire flue system is properly supported and connected.
- Ensure that any horizontal sections of pipe have a 1° fall towards the appliance (17mm per 1000mm).

4.6 CONNECTING THE GAS AND WATER

The appliance is supplied with service valves. The service valves are of the compression type. The accessories pack contains sealing washers etc, for use with the service valves. When connecting pipe work to the valves, tighten the compression end first then insert the sealing washers before tightening the valve to the appliance.

NOTE

It will be necessary to hold the valve with one spanner whilst tightening with another.

4.6.1 GAS (fig. 6)

The appliance is supplied with a 15mm service valve, connect a 15mm pipe to the inlet of the valve and tighten both nuts.

NOTE

It will be necessary to calculate the diameter of the gas supply pipe to ensure the appliance has an adequate supply of gas.

4.6.2 FLOW & RETURN (fig. 6)

The appliance is supplied with 22mm service valves for the flow and return connections, connect a 22mm pipe to the inlet of each valve and tighten both nuts.

NOTE

Depending on system requirements, it may necessary to increase the size of the flow & return pipe work after the service valve connections.

4.6.3 SAFETY VALVE (fig. 6)

Connect the safety valve connection pipe to the safety valve outlet. Connect a discharge pipe to the other end of the safety valve connection pipe and tighten. The discharge pipe must have a continuous fall away from the appliance to outside and allow any water to drain away thereby eliminating the possibility of freezing. The discharge pipe must terminate in a position where any water - possibly boiling - discharges safely without causing damage or injury, but is still visible.

4.6.4 CONDENSE PIPE

During normal operation the boiler produces condense which is collected in a trap located in the lower part of the boiler. A flexible pipe (condense outlet pipe) is connected to the outlet of the trap. The flexible pipe must be connected to a plastic waste pipe only. The plastic waste pipe must have a minimum of a 3° fall towards the drain. Any external run of pipe should be insulated to prevent the risk of freezing.

CONNECTING THE CONDENSATE OUTLET

Gently pull the condense outlet pipe down from its location inside the boiler until approximately 200mm protrudes from the underside of the boiler. Connect a suitable plastic (not copper) pipe (no less than 20mm diameter) to the outlet pipe and ensure it discharges in accordance with building regulations or other rules in force.

4.7 ELECTRICAL CONNECTIONS

The electrical supply must be as specified in section 3/3A. A qualified electrician should connect the electrical supply to the appliance. If controls - external to the appliance - are required, a competent person must undertake the design of any external electrical circuits, please refer to section 8 for detailed instructions. ANY EXTERNAL CONTROL OR WIRING MUST BE SERVED FROM THE SAME ISOLATOR AS THAT OF THE APPLIANCE. The supply cable from the isolator to the appliance must be 3-core flexible sized 0.75mm to BS 6500 or equivalent. Wiring to the appliance must be rated for operation in contact with surfaces up to 90ºC.

4.7.1 CASING REMOVAL

To gain internal access to the appliance you must first remove the casing, proceed as outlined below:

- locate and remove the 2 transit screws (**C**)
- remove the 2 screws (**B**) located at the Left & Right of the underside of the casing
- lift the casing upward to disengage it from the top locating hooks and then remove
- store the casing and screws (**B**) safely until required. Re-fit in the reverse order
- use on of the discarded transit screws to secure the cover to the boiler.

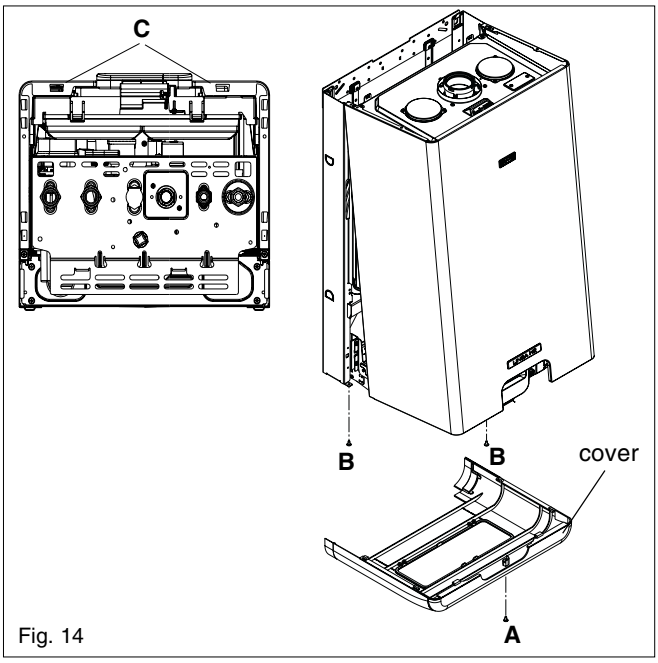

Fig. 14

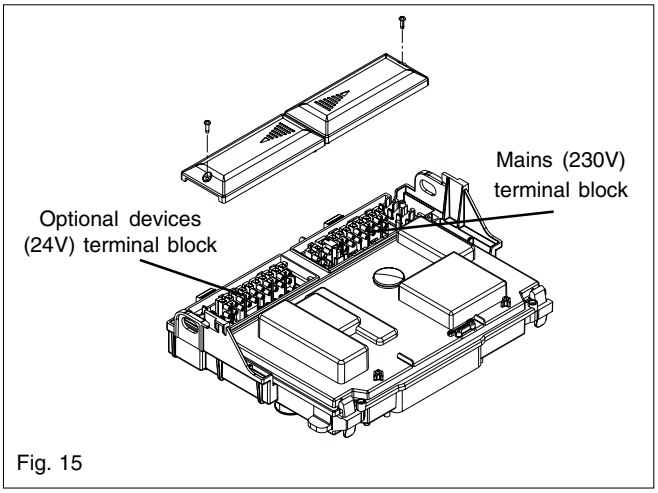

Fig. 15

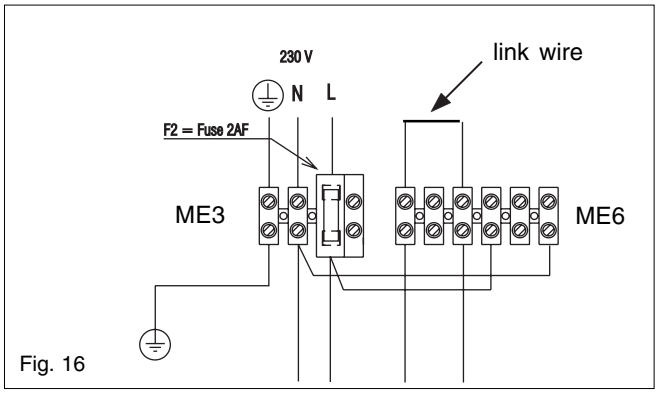

Fig. 16

4.7.2 APPLIANCE TERMINAL BLOCK

The appliance terminal block is located on the rear of the control fascia. Remove the casing as described in 4.7.1. Lift the control fascia upward and lower it. Locate the terminal block covers (see fig. 15).

NOTE

The appliance comes with a factory fitted link to allow basic operation of the boiler via the mode selector switch. If it is anticipated that external controls will be required please refer to the wiring diagrams in section 8 for more detailed information.

4.7.3 CONNECTING THE MAINS (230V) INPUT (see fig. 16)

Locate and remove the screw securing the right terminal block cover (230V). Pass the cable through the cable anchorage point.

Connect the supply cable wires (LIVE, and NEUTRAL) to their corresponding terminals on the appliance terminal block. Connect the EARTH wire to the EARTH block (see fig. 16) ensuring that it's left slightly longer that the others, this will prevent strain on the EARTH wire should the cable become taut.

Do not remove the link wire unless additional external controls are to be fitted (see section 8). The securing screw on the cable anchorage should now be tightened. This must be done before the control fascia is re-fitted in the upright position. The appliance casing, screws and lower cover can now be re-fitted.

5.1 GAS SUPPLY INSTALLATION

Inspect the entire installation including the gas meter, test for soundness and purge. Refer to BS 6891 for specific instruction.

5.2 THE HEATING SYSTEM

The appliance contains components that may become damaged or rendered inoperable by oils and/or debris that are residual from the installation of the system, consequently it is essential that the system be flushed in accordance with the following instructions.

5.3 INITIAL FILLING OF THE SYSTEM

Ensure both flow and return service valves are open, remove appliance casing as described in 4.7.1, identify the automatic air release valves (AAV) and loosen the dust cap/s by turning the cap anti-clockwise one full turn.

IMPORTANT, THERE ARE NO MANUAL AIR RELEASE VALVES LOCATED ON THE APPLIANCE. Ensure all manual air release valves located on the heating system are closed.

Connect the filling loop as shown in fig. 5, slowly proceed to fill the system by firstly opening the inlet valve connected to the flow pipe, and then turning the lever on the fill valve, to the open position. As water enters the system the pressure gauge will begin to rise. Once the gauge has reached 1 BAR close both valves and begin venting all manual air release valves, starting at the lowest first. It may be necessary to go back and top-up the pressure until the entire system has been filled. Inspect the system for water soundness, rectifying any leaks.

5.4 INITIAL FLUSHING OF THE SYSTEM

The whole of the heating system must be flushed both cold and hot as detailed in 5.8. Open all radiator or heating valves and the appliance flow & return service valve. Drain the boiler and system from the lowest points Open the drain valve full bore to remove any installation debris from the boiler prior to lighting. Refill the boiler and heating system as described in 5.3.

5.5 PRE-OPERATION CHECKS

Before attempting the initial lighting of the appliance, the following checks must be carried out:

- ensure all gas service valves from the meter to the appliance are open and the supply pipe has been properly purged;
- ensure the proper electrical checks have been carried out, (see 7.8) particularly continuity, polarity and resistance to earth;
- ensure the 3 AMP fuse - supplied with the appliance - has been fitted;
- ensure the system has been filled, vented, and the pressure set to 1 BAR;
- ensure the flue system has been fitted properly and in accordance with the instructions;
- ensure all appliance service valves are open.

5.6 INITIAL LIGHTING

Ensure the electrical supply to the appliance is switched on. Press the ON/OFF switch to switch the appliance ON (indicated by active display), ensure any external controls are switched to an 'ON' position and are calling for hea.

Press the function button and select "Winter mode", the appliance will now operate in the "Winter mode" as described in 1.2. Should the appliance fail to ignite, refer to 5.6 and/or section 7 (mode of operation, parameter setting, & faultfinding).

5.7 CHECKING GAS PRESSURE AND COMBUSTION ANALYSIS

The appliance is factory set and should require no additional adjustment once installed. However, if the gas valve has been adjusted, or the appliance has been converted for use with another gas type, then it's necessary to carry out a combustion analysis/check to ensure that correct combustion is occurring. Details on how to carry out the combustion analysis can be found in section 7.

IMPORTANT

It's imperative that a sufficient dynamic - gas - pressure is maintained at all times. Should the dynamic gas pressure fall below an acceptable level, the appliance may malfunction or sustain damage.

5.8 FINAL FLUSHING OF THE HEATING SYSTEM

The system shall be flushed in accordance with BS 7593. Should a cleanser be used, it must be suitable for Copper and Aluminium heat exchangers. It shall be from a reputable manufacturer and shall be administered in strict accordance with the manufacturers' instructions and the DWTA code of practice.

5.8.1 INHIBITORS

See Section 3 "General Requirements".

5.9 SETTING THE BOILER OPERATING TEMPERATURE

The flow outlet temperature can be adjusted between 20 °C - 80 °C via the Heating thermostat knob (see fig.1).

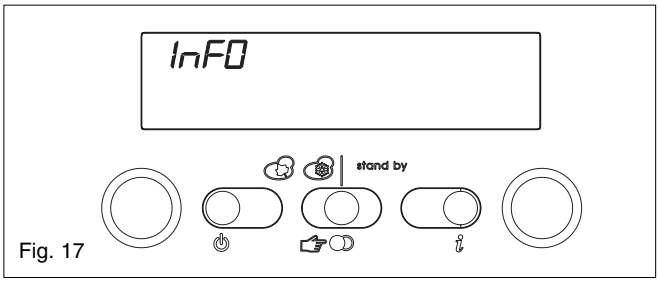

Fig. 17

5.9.1 INFORMATION MODE

The appliance keypad can be used to display certain information on the working status of the boiler. Push the Info button (i) to enter the info menu (fig. 17).

The following information are shown pushing subsequently the i button:

Info 1 N/A

Info 2 water pressure (fig. 18)

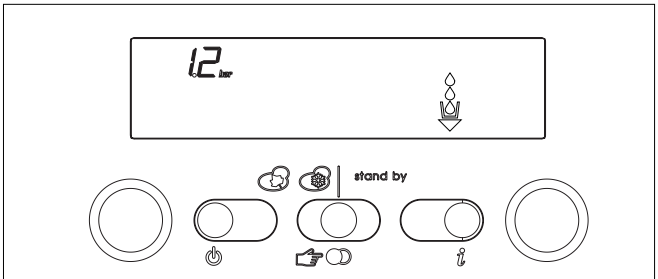

Fig. 18

Info 3 CH temperature set (fig. 19)

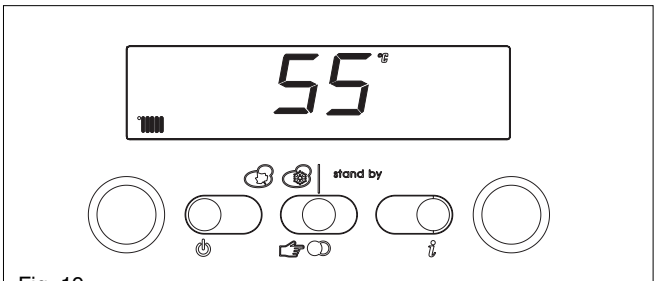

Fig. 19

Info 4 N/A.

5.9.3 INFORMATION MODE SERVICE

Push and hold for 10 seconds the Info button (i) to enter the info menu service (**INF2 is shown on the display**). The following information are shown pushing subsequently the i button:

Step number	Information displayed
01	Temperature at flow sensor °C
02	Temperature at return sensor °C
03	Unused
04	Unused
05	Unused
06	Unused
07	Unused
FAN	Fan speed RPM/100
09	Unused
10	Unused

5.9.4 ADJUSTING APPLIANCE PARAMETERS

The appliance is delivered with pre-set parameters. Some parameters can be changed or adjusted if required. For further details, please refer to section 7.

5.10 SETTING THE SYSTEM DESIGN PRESSURE

The design pressure should be a minimum of 0.5 BAR and a maximum of 1.5 BAR.

The actual reading should ideally be 1 BAR plus the equivalent height in metres (0.1 BAR = 1 metre) to the highest point in the system above the base of the appliance (up to the maximum of 1.5 BAR total).

N.B. The safety valve is set to lift at 3 BAR/30 metres/45 psig.

To lower the system pressure to the required value, drain off some water from the appliance drain valve until the required figure registers on the pressure gauge (see fig. 1).

5.11 REGULATING THE CENTRAL HEATING SYSTEM

Fully open all radiator and circuit valves and run the appliance for both heating and hot water until heated water is circulating. If conditions are warm remove any thermostatic head. Adjust radiator return valves and any branch circuit return valves until the individual return temperatures are correct and are approximately equal.

5.12 FINAL CHECKS

- ENSURE ALL TEST NIPPLES ON THE APPLIANCE GAS VALVE ARE TIGHT AND CHECKED FOR SOUNDNESS.
- ENSURE THE APPLIANCE FLUE SYSTEM IS FITTED CORRECTLY AND IS PROPERLY SECURED.
- ENSURE ALL PIPE WORK IS RE-CHECKED FOR SOUNDNESS.
- RE-FIT APPLIANCE CASING.
- COMPLETE BENCHMARK CHECKLIST.

FOR UK ONLY

Complete details of the boiler, controls, installation and commissioning in the Benchmark checklist at the back of this book. It is important that the Benchmark checklist is correctly completed and handed to the user. Failure to install and commission the appliance to the manufacturers instructions may invalidate the warranty.

5.13 INSTRUCTING THE USER

Hand over all documentation supplied with this appliance - including these instructions - and explain the importance of keeping them in a safe place.

Explain to the user how to isolate the appliance from the gas, water and electricity supplies, and the locations of all drain points. Show the user how to operate the appliance and any associated controls correctly.

Show the user the location of the filling valve and how to top-up the system pressure correctly and show the location of all manual air release points.

Explain to the user how to turn off the appliance for both long and short periods and advise on the necessary precautions to prevent frost damage.

Explain to the user that for continued safe and efficient operation, the appliance must be serviced annually by a competent person.

IMPORTANT

To validate the appliance warranty, it's necessary to register the appliance details with us.

The warranty can be registered in several ways:

- by completing the warranty registration card and posting to us using the pre-paid envelope supplied
- online at: vokera.co.uk
- for UK residents by calling: 0870 607 0281
- for ROI residents by calling: 1850 221121.

6.1 GENERAL

To ensure the continued safe and efficient operation of the appliance, it is recommended that it is checked and serviced at regular intervals.

To ensure correct and safe operation of the appliance, it is essential that any worn or failed component be replaced only with a **genuine Vokera spare part**. It should be remembered that although certain generic components may look similar, they will be specific to an individual appliance or product range. Use of non-genuine Vokera spare parts could invalidate your warranty and may pose a potential safety hazard. The frequency of servicing will depend upon the particular installation conditions, but in general, once per year should be sufficient. It is the law that any servicing work is carried out by competent person such as a Vokera engineer, an approved service agent, British Gas, CORGI registered personnel or other suitably qualified personnel.

The following instructions apply to the appliance and its controls, but it should be remembered that the central heating and the domestic hot water systems would also require attention from time to time.

6.2 ROUTINE ANNUAL SERVICING

- Check the operation of the appliance and ensurit functions as described in section 7.
- Compare the performance of the appliance with its design specification. The cause of any noticeable deterioration should be identified and rectified without delay.
- Thoroughly inspect the appliance for signs of damage or deterioration especially the flue system and the electrical apparatus.
- Check and adjust - if necessary - all burner pressure settings (see 7.4).
- Check and adjust - if necessary - the system design pressure (see 5.10).
- Carry out an analysis of the flue gases (see 7.5) and visually check the condition of the entire flue assembly.
- Compare the results with the appliance design specification. Any deterioration in performance must be identified and rectified without delay.
- Check that the burner and main heat exchanger are clean and free from any debris or obstruction.

6.3 REPLACEMENT OF COMPONENTS

Although it is anticipated that this appliance will give years of reliable, trouble free service, the life span of components will be determined by factors such as operating conditions and usage. Should the appliance develop a fault, the fault finding section will assist in determining which component is malfunctioning.

6.4 COMPONENT REMOVAL PROCEDURE

To remove a component, access to the interior of the appliance is essential. Isolate the appliance from the electrical supply and remove the fuse. And when necessary, close all service valves on the appliance, remove the appliance casing as described in section 4.7.1 and drain the water content from the appliance via the drain valve. Ensure some water absorbent cloths are available to catch any residual water that may drip from the appliance or removed component. Undertake a complete commissioning check as detailed in section 5, after replacing any component. **ALWAYS TEST FOR GAS SOUNDNESS IF ANY GAS CARRYING COMPONENTS HAVE BEEN REMOVED OR DISTURBED.**

6.4.1 AIR BOX FRONT COVER REMOVAL (fig. 20)

Locate the two clips and remove air box front cover. If necessary to remove the air box side cover, locate and remove the 4 screws.

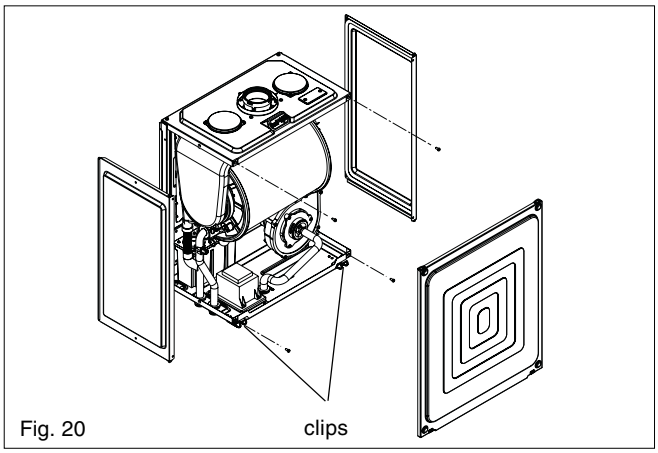

Fig. 20

6.5 PUMP ASSEMBLY (fig. 21)

Carry out component removal procedure as described in 6.4. Locate and remove the 2 securing screws (**A**) at the rear of the pump assembly. Disconnect the flow pipe (**B**) from the combustion chamber connection, slacken the pipe at the hydraulic assembly and swing/rotate clear of the pump assembly. Disconnect and remove the pump outlet pipe (**C**) from the pump assembly/combustion chamber connection. Remove the expansion pipe locking pin (**D**) from the top of the pump assembly and withdraw the flexible pipe. Disconnect the electrical wiring from the pump's electrical connection point (**E**). Remove locking pin (**F**) from pump base and lift pump assembly clear of the hydraulic manifold. The pump assembly can now be removed from the appliance. Replace carefully in the reverse order.

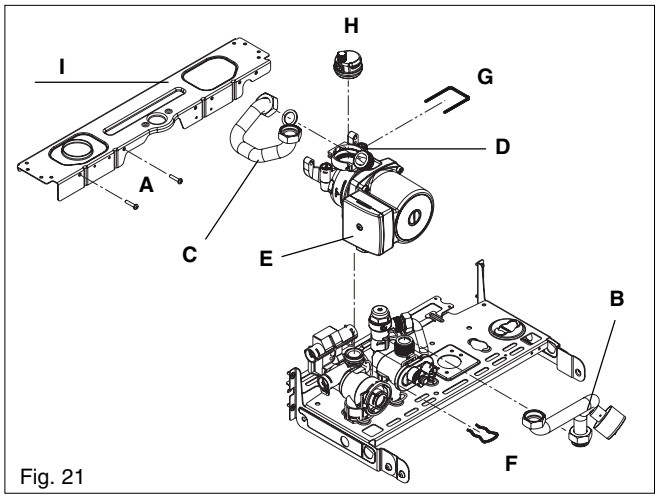

Fig. 21

6.6 SAFETY VALVE (fig. 23)

Carry out component removal procedure as described in 6.4. Disconnect the outlet pipe **(A)** from the safety valve, remove safety valve locking pin **(B)** from the hydraulic manifold. Replace in the reverse order.

6.7 BOTTOM AUTOMATIC AIR RELEASE VALVES (fig. 21)

Carry out component removal procedure as described in 6.4. Remove the expansion pipe locking pin (**D**) from the pump assembly and remove the expansion pipe. Locate and remove the AAV locking pin (**G**) from the pump assembly and remove the AAV assembly (**H**). Replace in the reverse order.

6.7.1 TOP AAV (fig. 22)

Carry out component removal procedure as described in 6.4.
Remove the drain pipe **(A)**. Unscrew the top AAV. Replace in the reverse order. Loctite or similar should be used as a thread sealant for the AAV.

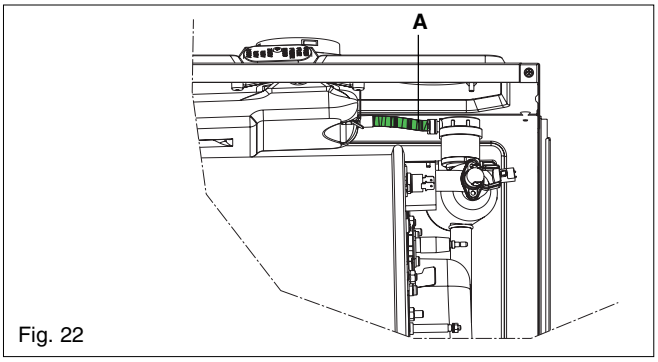

Fig. 22

6.8 WATER PRESSURE SENSOR/GAUGE (fig. 23)

Carry out component removal procedure as described in 6.4. Locate and remove the locking pin (**C**) from the water pressure sensor/gauge assembly. Remove the wiring. Carefully withdraw the assembly. Replace in the reverse order.

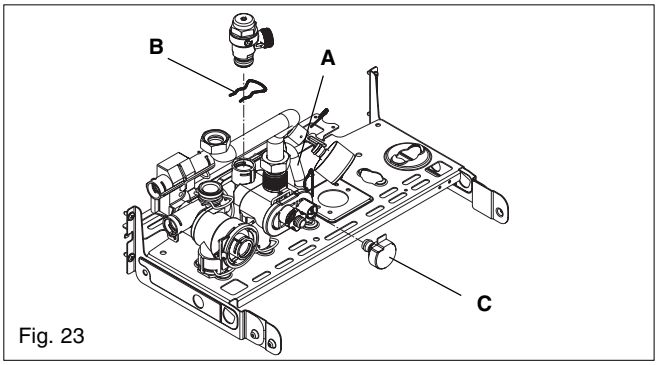

Fig. 23

6.9 PRIMARY THERMISTOR (fig. 1)

Carry out component removal procedure as described in 6.4. Unclip and remove the air chamber front cover. Unclip the primary thermistor from the flow outlet pipe. Disconnect thermistor electrical plug. Replace in the reverse order.

6.10 RETURN THERMISTOR (fig. 1)

Carry out component removal procedure as described in 6.4. Unclip and remove the air chamber front cover. Unclip the return thermistor from the return inlet pipe. Disconnect thermistor electrical plug. Replace in the reverse order.

6.11 PRINTED CIRCUIT BOARD (fig. 24)

Carry out component removal procedure as described in 6.4. Lift the control fascia upward and rotate it. Locate and remove the screws (**A**) which secure the PCB cover, push the clips (**B**) and remove cover, after carefully taking note of all wiring connections, disconnect all wiring from the PCB, locate and remove the PCB securing screws, remove the required PCB. Replace in the reverse order.

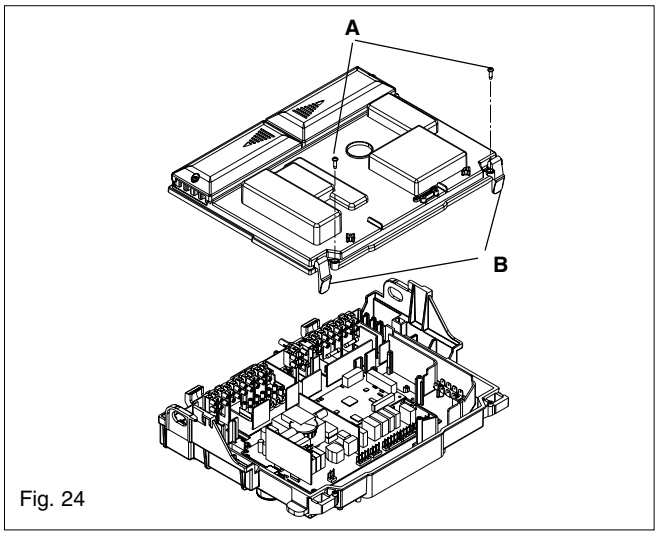

Fig. 24

6.12 GAS VALVE (fig. 25)

Carry out component removal procedure as described in 6.4. The gas valve must be changed as complete unit. Disconnect the electrical plug and leads from the gas valve, slacken and unscrew gas valve inlet and outlet connections. **Please note,** the sealing washers (**B**) must be discarded and replaced with new sealing washers. Disconnect the compensation pipe (**C**). Locate and remove gas valve retaining screws (**D**) on the underside of the boiler if required, the gas valve can now be removed. Replace in the reverse order. Check and adjust burner pressure settings.
WARNING, A GAS SOUNDNESS CHECK MUST BE CARRIED OUT.

6.12.1 INJECTOR (fig. 25)

Carry out component removal procedure as described in 6.4. Unscrew and remove gas pipe connections (**A & E**). Locate and remove the injector (**F**) inside the pipe. Replace in the reverse order. Check and adjust burner pressure settings.
WARNING, A GAS SOUNDNESS CHECK MUST BE CARRIED OUT.

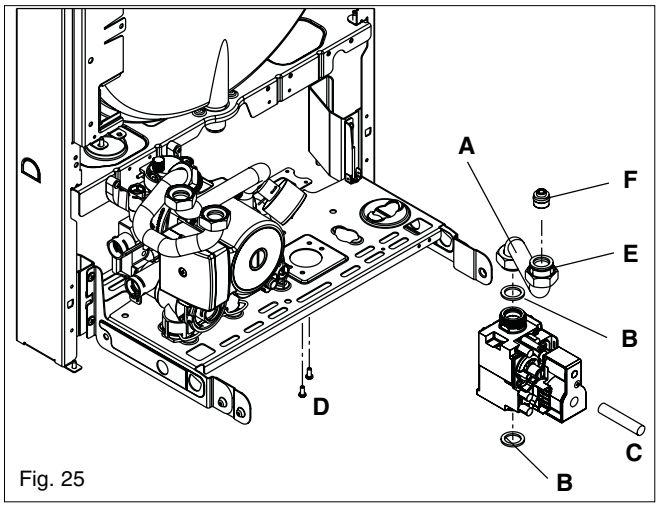

Fig. 25

6.13 ELECTRODE & CONDENSE SENSOR (fig. 26)

Carry out component removal procedure as described in 6.4.
Unclip and remove the air chamber front and RH side covers. Disconnect the electrode lead and ancillary wiring from their respective connectors. Remove the 2 retaining screws (**A**) for electrode (**B**) and remove. Remove the retaining nut (**C**) for condense sensor (**D**) and remove.

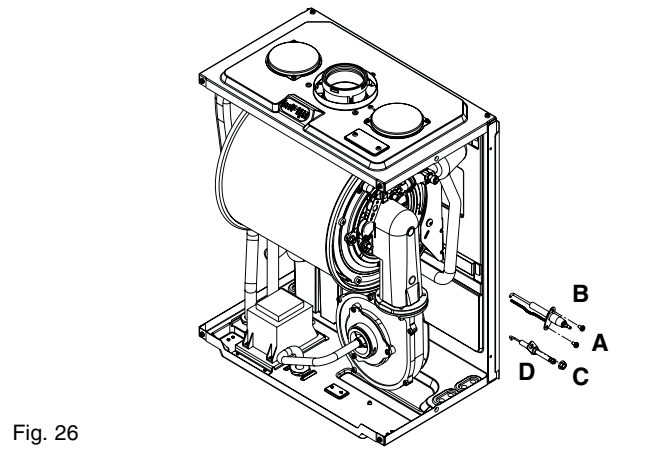

Fig. 26

6.14 FLUE FAN & MIXER (fig. 27)

Carry out component removal procedure as described in 6.4.
Unclip and remove the air chamber front and the RH side covers. Slacken the gas pipe (**A**) at the air box connection and swing/rotate of the fan assembly. To remove the mixer (**B**) locate and remove the three screws (**C**). To remove the fan (**D**), disconnect the electrical connections attached to the fan, locate and remove the four screws (**E**).
Gently ease the fan from its location.
Replace in the reverse order. Ensure all seals are in good condition, taking care to ensure they are replaced correctly.

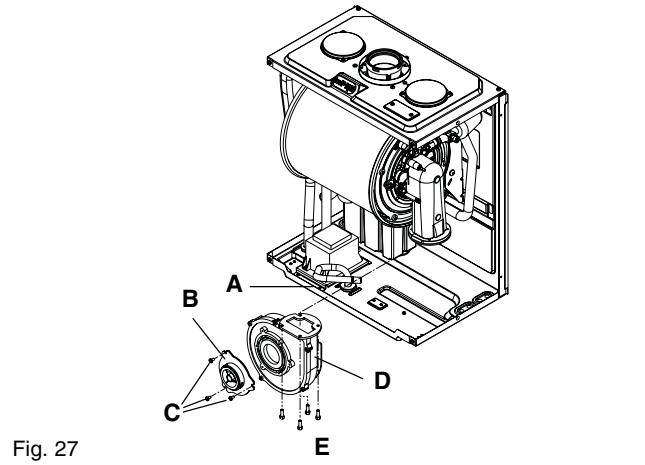

Fig. 27

6.15 BURNER (fig. 28)

Carry out component removal procedure as described in 6.4.
Unclip and remove the air chamber front and the RH side covers. Slacken the gas pipe (**A**) at the air box connection and swing/rotate of the fan assembly. Locate and remove the 3 internal nuts (**B**) which secure the fan assembly in position (**C**) to the heat exchanger (**D**). Gently ease the fan assembly out of its location. Once the assembly has been removed, the burner (**E**) can be withdrawn from the heat engine. Ensure the seal (**F**) is in good condition, taking care to ensure it is replaced correctly. Replace in the reverse order.

6.16 MAIN HEAT EXCHANGER (fig. 29 & 30)

Carry out component removal procedure as described in 6.4. Unclip and remove the three air chamber covers (front, LH, RH sides). Disconnect all the wiring connections.
Fig. 29: Slacken the gas pipe (**A**) at the air box connection and swing/rotate of the fan assembly. Disconnect the flow (**B**), return (**C**) and condense connections on the heat exchanger. Locate and remove the 4-screws that secure the heat exchanger to the combustion chamber (**D**). Move the heat exchanger to the right and disconnect it from the flue collector (**E**). The heat exchanger can now be lifted up and withdrawn from the appliance.
Fig. 30: To remove the fan burner assembly (**A**) locate and remove the 3 external nuts (**B**).
Replace in the reverse order. Ensure all seals are in good condition, taking care to ensure they are replaced correctly.

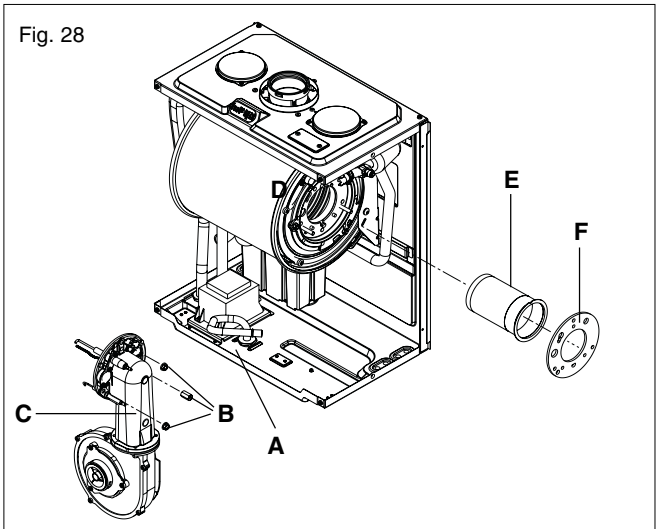

Fig. 28

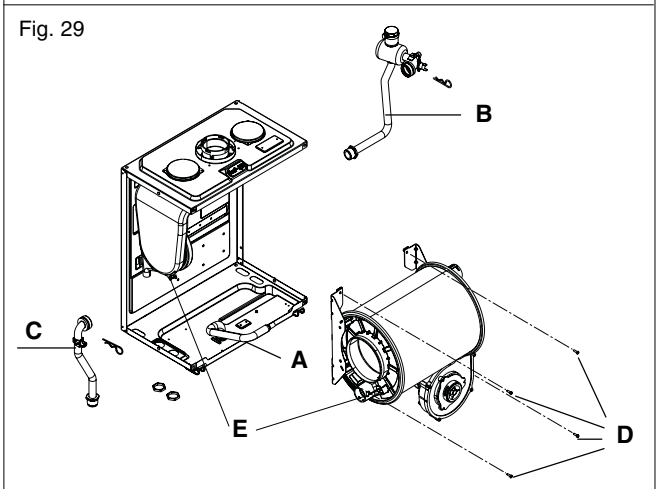

Fig. 29

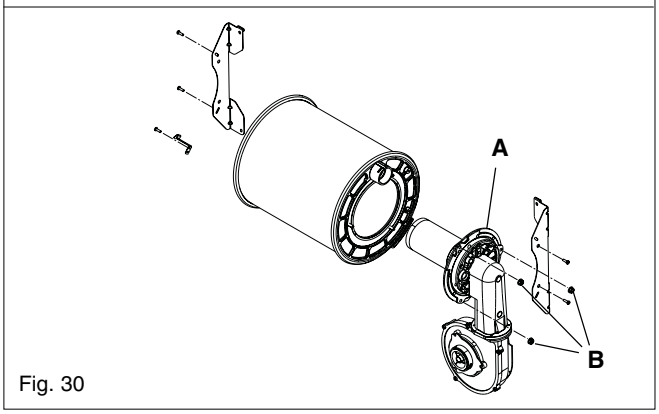

Fig. 30

6.17 AUTOMATIC BY-PASS & DHW NON-RETURN VALVE (fig. 31)

Carry out component removal procedure as described in 6.4.
Remove the locking pin (**A**) that secures the cover (**B**) to the hydraulic manifold. Using a hooked piece of wire, carefully withdraw the by-pass cartridge (**C**) and/or DHW non-return cartridge (**D**). Ensure all seals are in good condition, taking care

to ensure they are replaced correctly. Replace in the reverse order ensuring the cartridge is facing the correct way.

6.18 EXPANSION VESSEL (fig. 1)

Should the removal and replacement of the expansion vessel be deemed impractical, an external expansion vessel may be fitted to the return pipe as close to the appliance as possible.

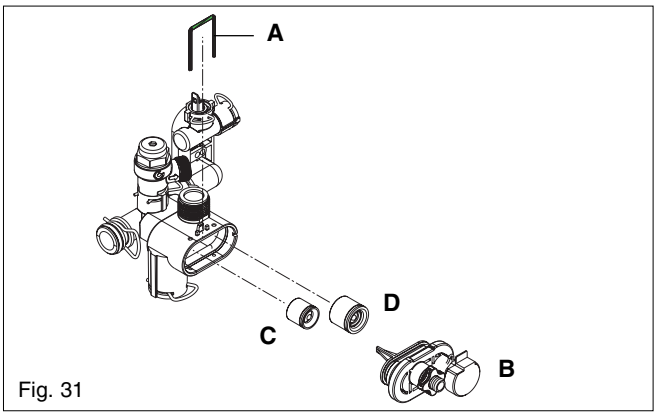

Fig. 31

6.18.1 EXPANSION VESSEL REMOVAL (with sufficient clearance above, fig. 32)

Carry out component removal procedure as described in 6.4.

Disconnect the flue from the appliance. Disconnect the expansion vessel from the flexible expansion pipe. Disconnect the flexible expansion pipe from the vessel. Unscrew the nut that secures the vessel to the frame. Locate and remove the 6 screws (**A**) that secure the vessel top holding plate (**B**), remove the plate. The expansion vessel can now be removed. Replace in the reverse order. Ensure all seals are in good condition, taking care to ensure they are replaced correctly.

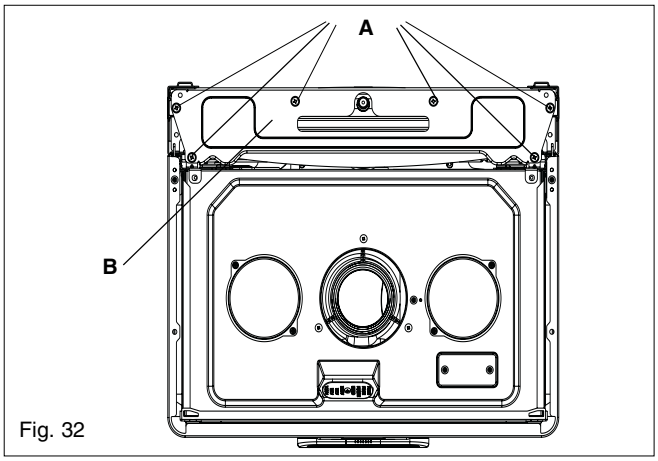

Fig. 32

6.19 FAN TRANSFORMER REMOVAL (fig. 33)

Carry out component removal procedure as described in 6.4. Unclip and remove the air chamber front and left side covers. Disconnect the fan transformer wiring. Locate and remove the 2 screws (**D**) that secure the fan transformer to the air box plate, cut the two cable ties previewed on heat-shrinkable insulators that protect the transformer connectors. Unthread the heat- shrinkable insulators. Carefully remove the fan transformer. Replace in the reverse order.

ATTENTION

The transformer connected, put the heat-shrinkable insulators and fix it thorugh two new calbe ties. The heat-shrinkable insulators assure the correct protection from liquid penetration of transformer connector.

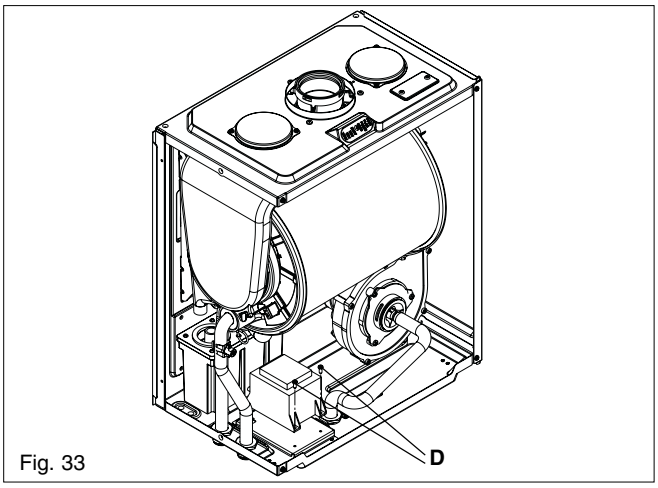

Fig. 33

6.20 CONDENSE TRAP REMOVAL (fig. 34)

Carry out component removal procedure as described in 6.4. Disconnect the 2 upper rubbers condense pipe (**A**). Remove the pin (**B**) that secures the trap to the air box plate. Disconnect the lower rubber condense pipe (**C**) from the condense trap. Carefully remove the condense trap. Replace in the reverse order.

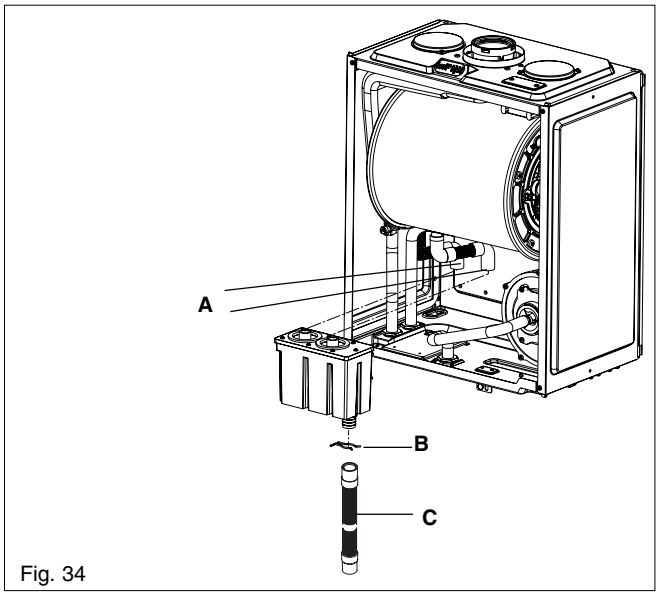

Fig. 34

6.21 FLUE COLLECTOR REMOVAL (fig. 35)

Carry out component removal procedure as described in 6.4. Unclip and remove the air chamber front and left side covers. Locate and remove the screw (**A**) that secures the flue gas analysis test point cover (**B**). Gently pull down and to the left and ease the flue collector from its location. Replace in the reverse order.

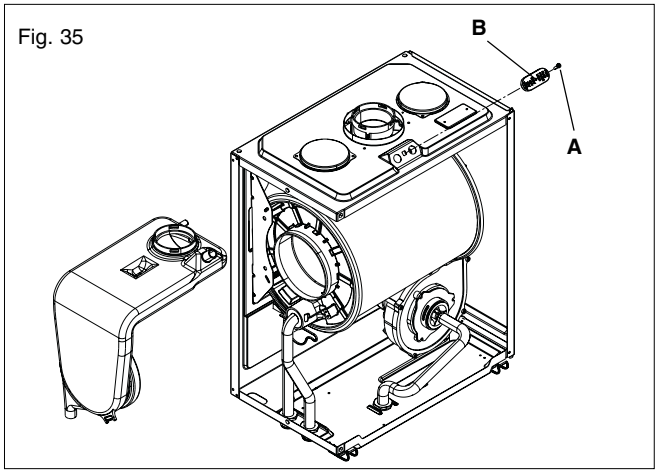

Fig. 35

7.1 CHECKING APPLIANCE OPERATION

When carrying out any repairs or servicing to the appliance, the relevant commissioning procedure must be undertaken to ensure the continued safe operation of the appliance. Particular attention should be made to ensure gas soundness, water soundness, and the electrical integrity of the appliance.

7.2 APPLIANCE MODES OF OPERATION

NOTE

There must be sufficient system water pressure (min. 0.5 bar) to ensure the water pressure switch is activated. If there is insufficient system pressure the pump and fan will be prevented from operating and the low-pressure fault indicator will be displayed.

7.2.1 SELECTOR SWITCH IN THE STANDBY POSITION

When the selector switch is in the STANDBY position, the following functions are active.

Active functions:

- frost-protection system
- pump anti-block.

7.2.2 BOILER "ON" IN COMFORT MODE

When the function switch is in the Comfort position, the relevant status indicators (see fig. 1A) are displayed and the appliance is active for heating and/or hot water requests.

Active functions:

- frost-protection system
- pump anti-block
- SARA booster function.

7.2.3 BOILER "ON" IN ECONOMY MODE

When the function switch is in the Economy position, the relevant status indicators (see fig. 1A) are displayed and the appliance is active for heating and/or hot water requests.

Active functions:

- frost-protection system
- pump anti-block
- SARA function.

7.2.4 APPLIANCE FUNCTIONS

- **SARA:** this function will automatically raise the outlet flow temperature when the heating temperature selector is in the 55-65°C range, if the appliance is unable to reach the room temperature set with room thermostat.
- **SARA Booster function:** this function will automatically raise the flow outlet temperature if/ when the appliance is unable to reach or maintain the desired flow outlet temperature.
- **Frost-protection:** this function is only active when there are no requests for heating or HW. Should the temperature of the primary thermistor drop below 7°C, the valve actuator will motor to the heating position. Should the temperature of the primary thermistor exceed 10°C during this period, the cycle will be aborted. If the temperature drops below 4°C, the boiler will operate on minimum power until the temperature of the primary thermistor reaches 30°C. Thereafter the pump & fan will over-run for 30-seconds.
- **Pump anti-block cycle:** when there has been no heating or HW request for 24-hours, the anti-block cycle is activated. The pump will be activated for a period of 1- minute. If the selector switch is in the Comfort or Economy position, the fan will also be active for 1- minute.

7.2.5 HEATING MODE

With the selector switch in the Comfort or Economy position and any additional controls (time clock, room thermostat, etc,) calling for heat, the appliance will operate in the heating mode.

The pump and fan will be activated via the flow temperature sensor. When the fan is sensed to be operating correctly, the ignition sequence commences. Ignition is sensed by the electronic circuitry to ensure flame stability at the burner. Once successful ignition has been achieved, the electronic circuitry allows 75% 0f the full gas rate through the appliance. After 15 minutes (adjustable, see parameter 28, cap. 7.3.1) the gas rate is increased to maximum (100%). The speed of the fan and therefore the output of the boiler is determined by the temperature of the water sensed by the flow temperature sensor, consequently a high temperature at the flow sensor results in a lower fan speed. As the water temperature increases, the temperature sensors - located on the flow pipe of the boiler - reduce the fan speed via the electronic circuitry. Depending on the load, either the water temperature will continue to rise until the set point is achieved or the water temperature will fall whereby fan speed will increase relative to the output required. When the boiler has reached the set point, the burner will switch off. The built-in anti-cycle device prevents the burner from re-lighting for an adjustable period of time (factory default is 5 minutes). When the temperature of the flow sensor falls below the setpoint,the burner will re-light.

NOTE

If the spark/sensing electrode does not sense ignition the appliance will re-attempt ignition a further 4-times then go to lockout.

When the set-point has been reached (the position of the heating temperature selector) as measured at the primary thermistor, the appliance will begin the modulation phase whereby the fan and gas valve will continuously modulate to maintain the set-point.

If the temperature continues to rise and exceeds the set-point by 6°C, the burner will shut down. A new ignition sequence will be enabled when the 5-minute anti-cycle has been performed and the temperature at the primary thermistor has dropped 6°C below the set-point.

NOTES
When the request for heating and/or hot water has been satisfied, the appliance pump and fan may continue to circulate to dissipate any residual heat within the appliance.

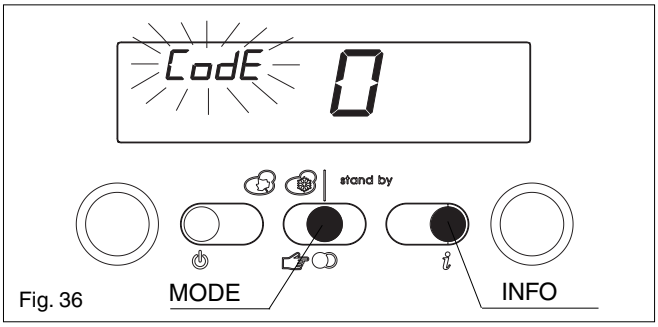

Fig. 36

7.3 SERVICE MODE & PARAMETERS

To check or adjust the service parameters you must first access the service mode. This mode is only accessible in OFF mode. To access the service mode: push INFO and MODE buttons at the same time for 10 seconds to enter the adjusting menu. The display shows "CodE" (see fig. 36). Push MODE button and select the service parameters code by turning the RH (right-hand) encoder and confirm it by pushing MODE button.

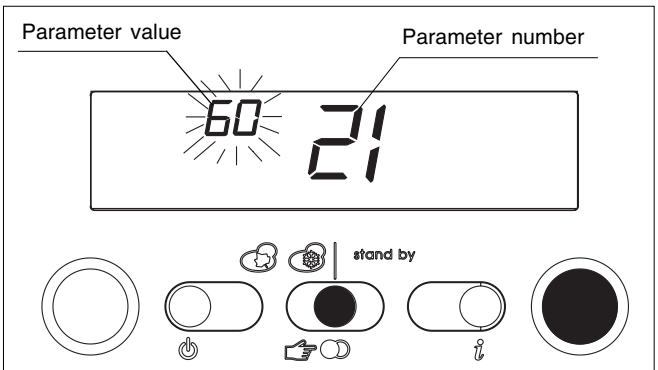

Fig. 37

7.3.1 PARAMETERS SETTING

Turn the RH (right-hand) encoder to display all parameters and their values (see fig. 37). When the required parameter is displayed, push the MODE button, the current (parameter) value will flash. To change the parameter value, rotate the RH (right-hand) encoder until the required value is displayed, push the MODE button to store the new value. To exit the service mode push INFO button.

Par.	Action
01	set gas type
HP	max fan speed
LP	min fan speed
SP	start-up fan speed
HH	force burner to max power
LL	force burner to min power
MM	force burner to medium power

7.4 ADJUSTING MODE & ADJUSTING THE GAS VALVE

THE GAS VALVE MUST BE SET-UP OR ADJUSTED WITH THE AID OF A PROPERLY CALIBRATED FLUE GAS ANALYSER.

Isolate the appliance from the electrical supply and remove the appliance casing as described in 4.7.1. Set the flue gas analyser to read CO_2 and insert the probe into the flue analysis test point (**A, B** fig. 35). Restore the electrical supply to the boiler and switch on the boiler. To adjust the gas valve you must first access the adjusting mode. This mode is only accessible in STANDBY mode. To access the adjusting mode: push INFO and MODE buttons at the same time for 10 seconds to enter the adjusting menu. The display shows "CodE" (see fig. 36). Push MODE button and select the adjust parameters password by turning the RH (right-hand) encoder and confirm it by pushing MODE button. The following functions are available in this mode.

7.4.1 GAS TYPE SETTING - 1

Select the parameter 1 by turning the RH (right-hand) encoder; push MODE button, it is possible to set gas type: 1(natural gas) - 2 (LPG), by turning the RH (right-hand) encoder. Push MODE button to store the gas type selected.

ATTENTION
Gas type and boiler output **must be** according to the boiler design specification. Vokera accepts no responsibility if the gas type and boiler output are set not according to the appliance specification.

7.4.3 ABSOLUTE MAX FAN SPEED - HP

Select the parameter HP by turning the RH (right-hand) encoder; push MODE button, it is possible to set the absolute max fan speed that is related to gas type and boiler output. Modify this parameter only if strictly necessary. The value is shown on the display as rpm/100 (i.e. 3600/100 = 36). The set value automatically modifies the max value of parameter 23.

7.4.4 ABSOLUTE MIN FAN SPEED - LP

Select the parameter LP by turning the RH (right-hand) encoder; push MODE button, it is possible to set the absolute min fan speed that is related to gas type and boiler output. Modify this parameter only if strictly necessary. The value is shown on the display as rpm/100 (i.e. 3600/100 = 36). The set value automatically modifies the min value of parameter 24.

7.4.5 START-UP FAN SPEED - SP

Select the parameter SP by turning the RH (right-hand) encoder; push MODE button, it is possible to set the start-up fan speed. Modify this parameter only if strictly necessary. The value is shown on the display as rpm/100 (i.e. 3600/100 = 36).

7.4.6 GAS VALVE MAXIMUM SETTING - HH

Select the HH parameter by turning the RH (right-hand) encoder; the boiler starts at the maximum power, the CO_2 reading should be as shown in the table below (for LPG see 9.2).

If the CO_2 reading is correct, pass to gas valve minimum setting (7.4.7). If the CO_2 reading is incorrect, the maximum gas pressure must be adjusted as follows:

- using a suitable screwdriver, very slowly turn the maximum adjustment screw (see fig. 38) - clockwise to decrease, counter clockwise to increase - until the correct value is displayed on the CO_2 analyser (allow time for the analyser to stabilise).

IMPORTANT
A GAS SOUNDNESS CHECK MUST BE CARRIED OUT.

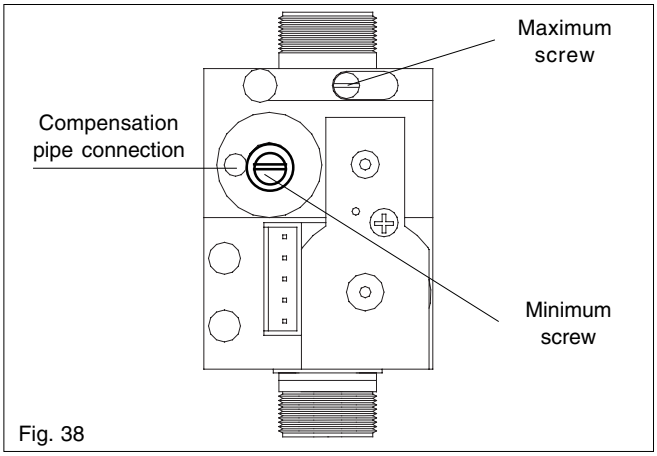

Fig. 38

7.4.7 GAS VALVE MINIMUM SETTING - LL

Select the LL parameter by turning the RH (right-hand) encoder. The boiler starts at the minimum power, the CO_2 reading should be as shown in the table above.
If the CO_2 reading is correct, pass to gas valve final setting (7.4.8). If the CO_2 reading is incorrect, the minimum gas pressure must be adjusted as follows:

- using a suitable screwdriver, very slowly turn the minimum adjustment screw (see fig. 38) - clockwise to increase, counter clockwise to decrease - until the correct value is displayed on the CO_2 analyser (allow time for the analyser to stabilise).

7.4.8 GAS VALVE FINAL SETTING - MM

Select the MM parameter by turning the RH (right-hand) encoder, the boiler starts at the medium power and it is possible to change the power of the boiler turning the CH temperature control in order to check the CO_2 in the overall range of the boiler.

7.4.9 MINIMUM OUTPUT CH (FAN SPEED) - 24

Select the parameter 24 by turning the RH (right-hand) encoder. Push MODE button, it is possible to modify the minimum fan speed by turning the RH (right-hand) encoder. Push MODE button to store the value.

7.5 COMBUSTION ANALYSIS TEST

A combustion analysis check can easily be carried out on the appliance via the test points located on the top of the appliance, however you must check that the CO_2 values are set correctly (see 7.4).

- Insert the flue gas analyser probe into the flue gas test point (see fig. 35).
- Operate the boiler in HH - LL and compare the values with those shown in 7.4.6. If different adjust the gas valve according to 7.4.6. and 7.4.7.

7.6 CHECKING THE EXPANSION VESSEL

Carry out the component removal procedure as described in 6.4. You must ensure that the boiler is completely drained of water.
Using a suitable pressure gauge, remove dust cap on expansion vessel and check the charge pressure. The correct charge pressure should be 1.0 bar ± 0.1 bar. If the charge pressure is less, use a suitable pump to increase the charge.

NOTE
You must ensure the drain valve is in the open position whilst re-charging takes place. Replace the dust cap and carry out the relevant commissioning procedure (section 5).

7.7 EXTERNAL FAULTS

Before carrying out any faultfinding or component replacement, ensure the fault is not attributable to any aspect of the installation.

7.7.1 INSTALLATION FAULTS

Symptom	Possible causes
No display/ ignition	Check wiring. Check electrical supply
No hot water	Check external controls
No heating	Check external controls

Fault code	Possible causes
10	Check gas supply, check flue system, check polarity.
30	Debris in flue system.
40	Check system pressure, check for air in boiler/ system.
70/72/74	Check service valves, check pump, check external zone valves.

7.8 ELECTRICAL CHECKS

Any electrical checks must be carried out by a suitably qualified person.

7.8.1 EARTH CONTINUITY TEST

Isolate the appliance from the electrical supply, and, using a suitable multi-meter, carry out a resistance test. Connect test leads between an appliance earth point and the earth wire of the appliance supply cable. The resistance should be less than 1 OHM. If the resistance is greater than 1 OHM check all earth wires and connectors for continuity and integrity.

7.8.2 SHORT CIRCUIT CHECK

Isolate the appliance from the electrical supply and, using a suitable multi-meter, carry out a short circuit test between the Live & Neutral connections at the appliance terminal strip (fig.17).
Repeat above test on the Live & Earth connections at the appliance terminal strip (fig.17).

NOTE
Should it be found that the fuse has failed but no fault is indicated, a detailed continuity check will be required to trace the fault. A visual inspection of components may also assist in locating the fault.

7.8.3 POLARITY CHECK

With the appliance connected to the electrical supply and using a suitable multimeter, carry out the following voltage tests:

- connect test leads between the Live & Neutral connections at the appliance terminal strip (fig.17). The meter should read approximately 230V ac. If so proceed to next stage. If not, see 7.8.4.
- connect test leads between the Live & Earth connections at the appliance terminal strip (fig.17). The meter should read approximately 230V ac. If so proceed to next stage. If not, see 7.8.4.
- connect test leads between the Neutral & Earth connections at the appliance terminal strip (fig.17). The meter should read approximately 0 - 15Vac. If so polarity is correct. If not, see 7.8.4.

7.8.4 REVERSED POLARITY OR SUPPLY FAULT

Repeat the above tests at the appliance isolator, if testing reveals correct polarity and/or supply at the isolator, re-check wiring and connections between the isolator and the appliance.

If tests on the isolator also reveal reversed polarity or a supply fault, consult the local electricity supplier for advice.

Code	Reason
11	false flame
12	restart ignition
13	check the wiring harness
23	check the wiring harness
25	high limit flow temperature probe
27	high limit return temperature probe
31	internal fault
35	fan error
36	internal fault
41	low water pressure
60	DHW NTC error
71	flow NTC error (2nd CH)
77	over heat underfloor thermostat (2nd CH)
78	flow/return ΔT error (2nd CH)
93	condensate level high
95	condensate sensor error

7.8.5 RESISTANCE TO EARTH CHECK

Isolate the appliance from the electrical supply and, using a suitable multi-meter, carry out a resistance test. Connect test leads between the Live & Earth connections at the appliance terminal strip (fig. 17). If the meter reads other than infinity there is a fault that must be isolated, carry out a detailed continuity check to identify the location of the fault.

These series of checks must be carried out before attempting any faultfinding procedures on the appliance. On completion of any task that required the disconnection and re-connection of any electrical wiring or component, these checks must be repeated.

7.9 FAULT FINDING

Before attempting any faultfinding, the electrical checks as detailed in 7.8 must be carried out.

Isolate the appliance from the electrical supply. Disconnect any external controls from terminal plug M6 (fig. 39) and insert a link-wire between the two Black wires at terminal plug M6 (fig. 39).

NOTE

Restore the electrical supply to the boiler and turn the selector switch to the on position. The boiler should now function as described in section 7.2. Should the boiler fail to respond, the internal fuses and connectors should be checked to ensure integrity and continuity. If the boiler still fails to respond, refer to the detailed faultfinding flowcharts overleaf.

7.10 TEMPORARY FAULT CODES

The built-in fault diagnostic system automatically displays a unique fault code that can be used to determine why the boiler has temporarily locked out. When the boiler displays a temporary fault code, the appropriate code is shown flashing on the display, accompanied by the symbol 🔧.

7.11 FINAL FAULT CODES

When the boiler displays a final fault code, the appropriate code is shown flashing on the display, accompanied by the symbol RESET (RESET).

Code	Reason
10	no flame detected
14	check the wiring harness
15	false flame
20	high limit thermostat/burner
21	check the wiring harness
22	check the wiring harness
24	high limit flow temperature probe
26	high limit return temperature probe
28	flow/return ΔT error
29	check the wiring harness
30	wrong parameter from the factory
33	fan error (low rpm)
34	fan error (start-up)
37	fan error (high rpm)
38	wrong parameter from the factory
40	low water pressure
42	pressure transducer fault
50-59	internal PCB failure
70	flow NTC error (2nd CH)
72	return NTC error (2nd CH)
74	flow temperature too high /flow sensor error (2nd CH)
79	flow/return ΔT error (2nd CH)
80-83	internal fault
92	condensate level high
94	condensate sensor error

7.11.1 CODE ERROR + RESET (RESET) ONLY

To reset the boiler, push ⏻ button. If the boiler starts without any problems, the lock-out is probably due to an accidental situation.

7.11.2 CODE ERROR + RESET (RESET) + 🔧

Refer to the following section and the detailed fault finding flowcharts overleaf.

FAULT CODES 1x
Fault codes 1x appear when the burner has failed to ignite or the flame supervisione system has failed to detect a flame. • Check incoming gas supply • Check spark electrode • Check polarity • Check integrity of flue system • Check gas valve • Check ignition control PCB

FAULT CODES 2x
• Check wirings

FAULT CODES 3x
Fault codes 3x appear if the boiler or flue system has developed a fault. • Check operation of fan • Check flue system

FAULT CODES 4x
Fault codes 4x appear if the pressure in the boiler is low. • Check water pressure • Check water pressure sensor

FAULT CODES 5x
Fault codes 5x appear if a problem with the main board exists. • Check parameters • Check gas valve • Check PCB

FAULT CODES 6x
Fault codes 6x appear if a problem exists with the secondary (DHW) thermistor. • Check thermistor • Check wiring continuity

FAULT CODE 7x
Fault codes 7x appear if a problem exists with the flow temperature **(2nd CH)**. • Check thermistor • Check wiring continuity

FAULT CODE 8x
PCB fault

FAULT CODE 9x
Fault codes 9x appear if the condense trap/pipe has become blocked. • Ensure the condense trap is clear • Ensure the condense pipe is clear

PLANT

PARAMETER	UNIT	MIN	MAX	STEP	DEF.	INSTALLAT. SETTING
1 Gas type		1 (Natural gas)	2 (LPG)	1		
2 Boiler output		34 (35 kW)		34-50	34 (35 kW)	
3 Building structure (adjust only if external sensor is fitted)	Min.	5 (light type of construction)	20 (heavy type of construction)	1	5	

DOMESTIC HOT WATER PARAMETERS

PARAMETER	UNIT	MIN	MAX	STEP	DEF.	INSTALLAT. SETTING
10 This parameter is not used on this model. Do not modify		0 = OFF 1 = N/A 2 = N/A 3 = N/A 4 = N/A 5 = N/A		1	0	
11 This parameter is not used on this model. Do not modify	°C	40	60	1	60	
12 This parameter is not used on this model. Do not modify					60	
13 This parameter is not used on this model. Do not modify					80	
14 This parameter is not used on this model. Do not modify					5	

CENTRAL HEATING PARAMETERS

PARAMETER	UNIT	MIN	MAX	STEP	DEF.	INSTALLAT. SETTING
20 Central heating type		0 = OFF 1 = ON 2 = Unused 3 = 2nd PUMP 4 = Unused 5 = Unused 6 = Unused		1	1 (ON)	
21 Max flow temperature 1st CH	°C	40	80	1	80	
22 Min flow temperature 1st CH	°C	20	39	1	39	
23 Max output CH (fan speed)	rpm	37 (3700*)	NG LPG 35 kW 60 60	1	NG LPG 35 kW 60 60	
24 Min output CH (fan speed)	rpm	NG LPG 35 kW 14 14	36 (3600*)	1	NG LPG 35 kW 14 14	
25 Differential heating positive	°C	2	10	1	6	
26 Differential heating negative	°C	2	10	1	6	
28 CH timer: force burner 75% after CH-start	Min	0	20	1	15	
29 CH timer: blocking time CH	Min	0	20	1	5	
30 CH timer on/off selection		0 (OFF)	1 (ON)	1	0 (OFF)	
31 Max flow temperature 2nd CH	°C	40	80	1	80	
32 Min flow temperature 2nd CH	°C	20	39	1	39	

FUNCTIONS

PARAMETER	UNIT	MIN	MAX	STEP	DEF.	INSTALLAT. SETTING
40 This parameter is not used on this model. Do not modify		0 (OFF) 1 (AUTO) 2 (ON)		1	0 (OFF)	
41 This parameter is not used on this model. Do not modify		0 (OFF) 1 (AUTO) 2 (ON)		1	0 (OFF)	
42 S.A.R.A. Function		0 (OFF)	1(AUTO)	1	1 (AUTO)	
43 S.A.R.A. Booster Function		0 (OFF)	1 (AUTO)	1	1 (AUTO)	
44 1st CH circuit climatic Thermo-regulation [2]		0 (OFF)	1 (AUTO)	1	1 (AUTO)	
45 Climatic curve selection on 1st CH circuit [2]		2,5	40	2,5	20	
46 2nd CH circuit climatic Thermo-regulation [1-2]		0 (OFF)	1 (AUTO)	1	1 (AUTO)	
47 Climatic curve selection on 2nd CH circuit [1-2]		2,5	40	2,5	20	
48 Unused		0 (OFF)	1 (AUTO)	1	0 (OFF)	
50 Unused		0 (OFF)	1 (ON)	1	1 (ON)	
51 Unused		0 (OFF)	1 (ON)	1	0 (OFF)	
52 Unused		0 (OFF)	1 (ON)	1	0 (OFF)	

GENERAL

PARAMETER	UNIT	MIN	MAX	STEP	DEF.	INSTALLAT. SETTING
61 This parameter is not used on this model. Do not modify	°C	0	10	1	4	
62 CH frost protection temperature	°C	0	10	1	6	
63 N/A	°C	0	10	1	6	
65 Unused					255	
85 Unused		0 (OFF)	1 (ON)	1	0 (OFF)	
86 Unused					0.6	

[1] Only with 2nd CH circuit
[2] Working only if an external sensor is fitted
* The value is shown on the display as rpm/100 (i.e. 3700/100 = 37)

8.1 EXTERNAL WIRING

The appliance comes with a factory fitted link to allow basic operation of the boiler via the mode selector switch. If external controls are to be added to the system, they must be connected to the appliance as shown in the following diagrams. For advice on controls that are not featured in this book, please contact Vokera technical on 0870 333 0520.

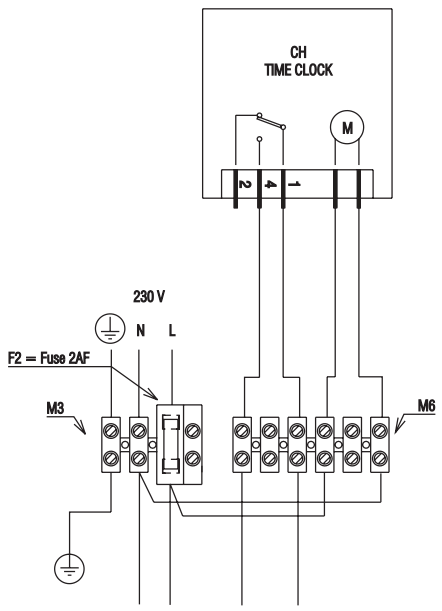

Fig. 39

8.2 TYPICAL CONTROL APPLICATIONS

The appliance can be used with the following controls:

- single-channel, voltage-free time clocks (fig. 39)
- programmable room thermostats (fig. 39)
- twin-channel programmers (figs 40 & 41). The appliance can be used in conjunction with typical 'S'-Plan/'Y'-Plan systems (see 8.4.1 & 8.4.2), please contact Vokera technical should you require further detailed instruction.

8.3 OTHER DEVICES

P2: external pump, a supplementary pump that can be managed directly from the boiler in order to satisfy larger systems with high flow rate or high pressure drop (i.e. underfloor heating).

Contact the controls manufacturer and/or Vokera technical department should you require more specific information on the suitability of a particular control. Further guidance on the recommended practice for the installation of external controls, can be found in CHeSS – HC5/HC6 (www.energyefficiency. gov.uk).

8.4.1 "Y"-PLAN WITH EXTERNAL TWIN CHANNEL PROGRAMMER (fig. 40)

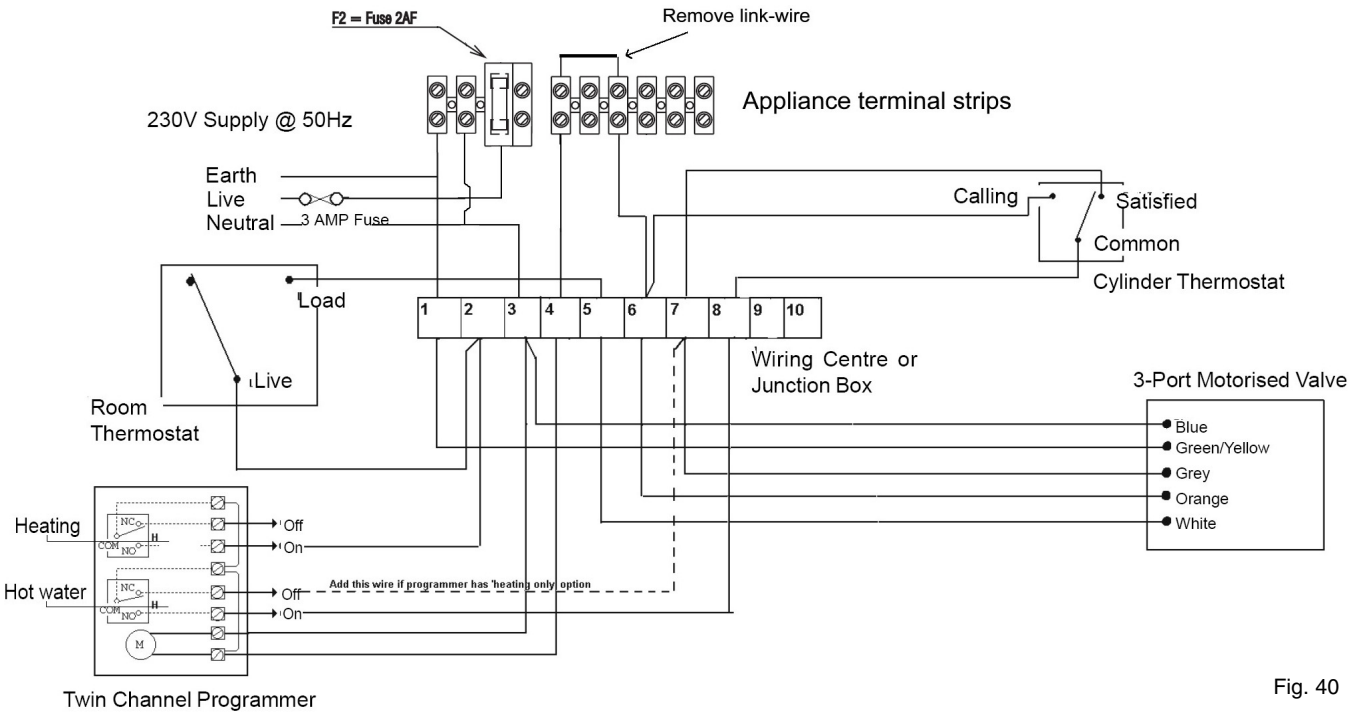

Fig. 40

8.4.2 "S"-PLAN WITH EXTERNAL TWIN CHANNEL PROGRAMMER (fig. 41)

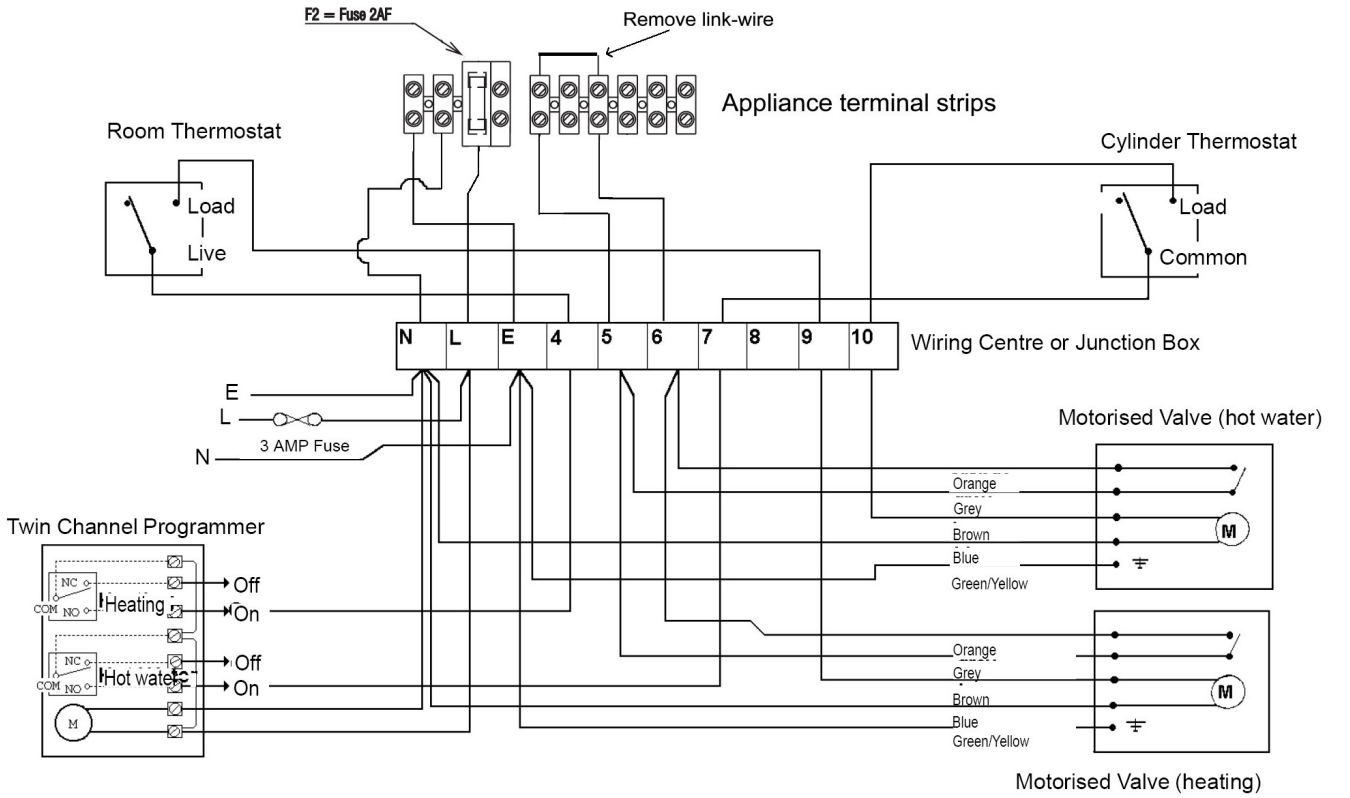

Fig. 41

NOTE. L-N-E CONNECTION MUST NOT BE INTERCHANGED
CONTROL SWITCHING OF TIME CLOCK AND ROOM THERMOSTAT RATED IS 230 V.a.c.

Fig. 42

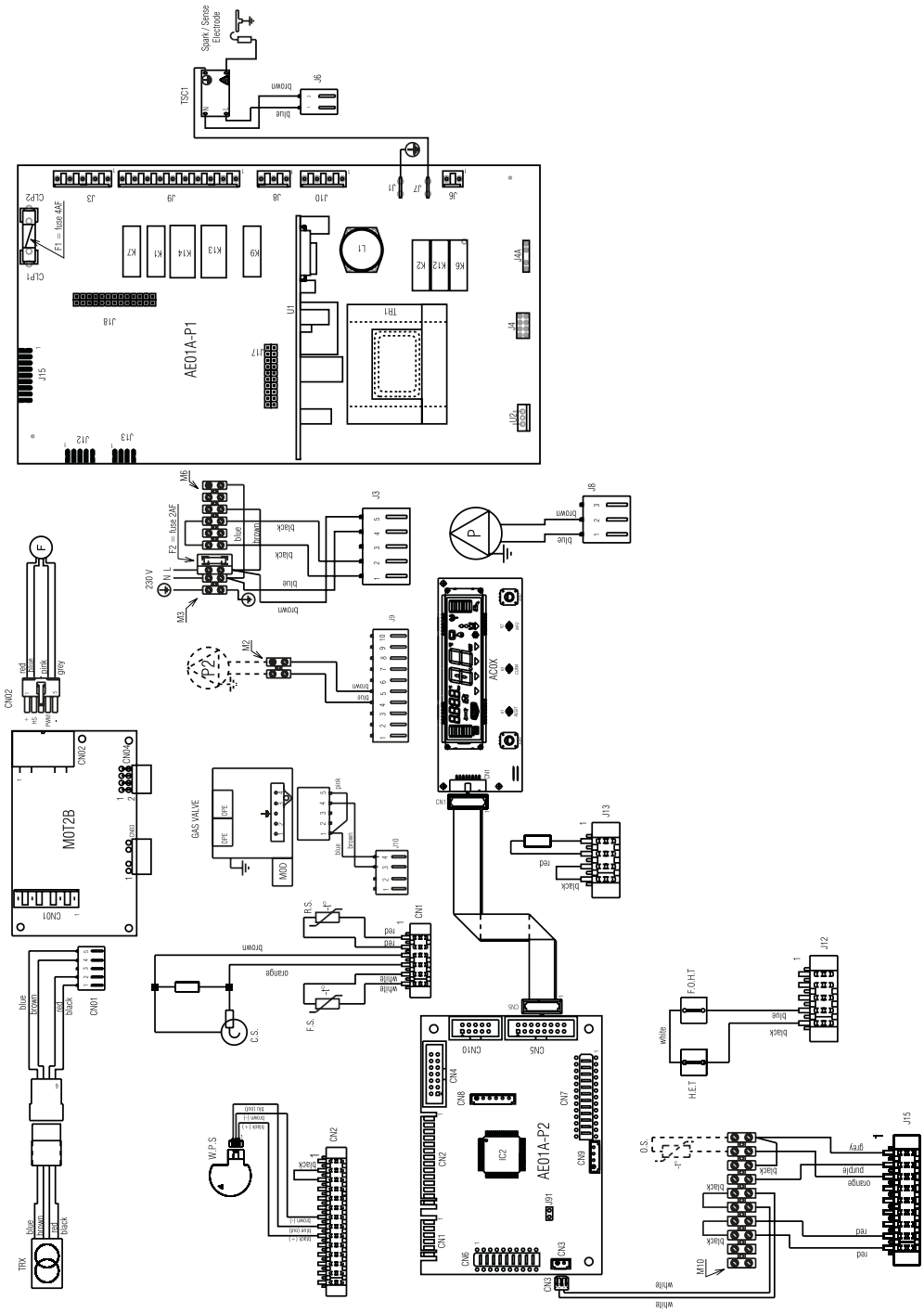

Key

TRX	Fan transformer
F	Fan
P	Pump
P2	Supplementary external pump
F1	Fuse 4A F
F2	Fuse 2A F
OPE	Gas valve solenoids
S.S.E	Spark/Sense electrode
MOD	Modulator
C.S.	Condensate sensor
G.V.	Gas valve
TSC1	Sparking transformer
TR1	Main transformer
O.S	Outside sensor
WPS	Water pressure sensor
FS	Flow termoster
RS	Return termoster
AE01A-P1	Master board
AE01A-P2	Ausiliary board controll
M0T2B	Motor control board
AC0X	Display board
K9	Pump relay
K13	3 V1 relay
K14	3 V2 relay
K1	Not used
K7	Not used
K6	Flame sensing relay
K12	Power supply for brushless motor relay
K2	Power supply for discharge TSC1 trasformer
F.O.H.T	Flow over heat thermostat
H.E.T	Heat exchanger thermostat
M3-M6	Terminal strip for electrical connection hight power
M10	Terminal strip for electrical connection low power
M2	Terminal strip connection secondary pump

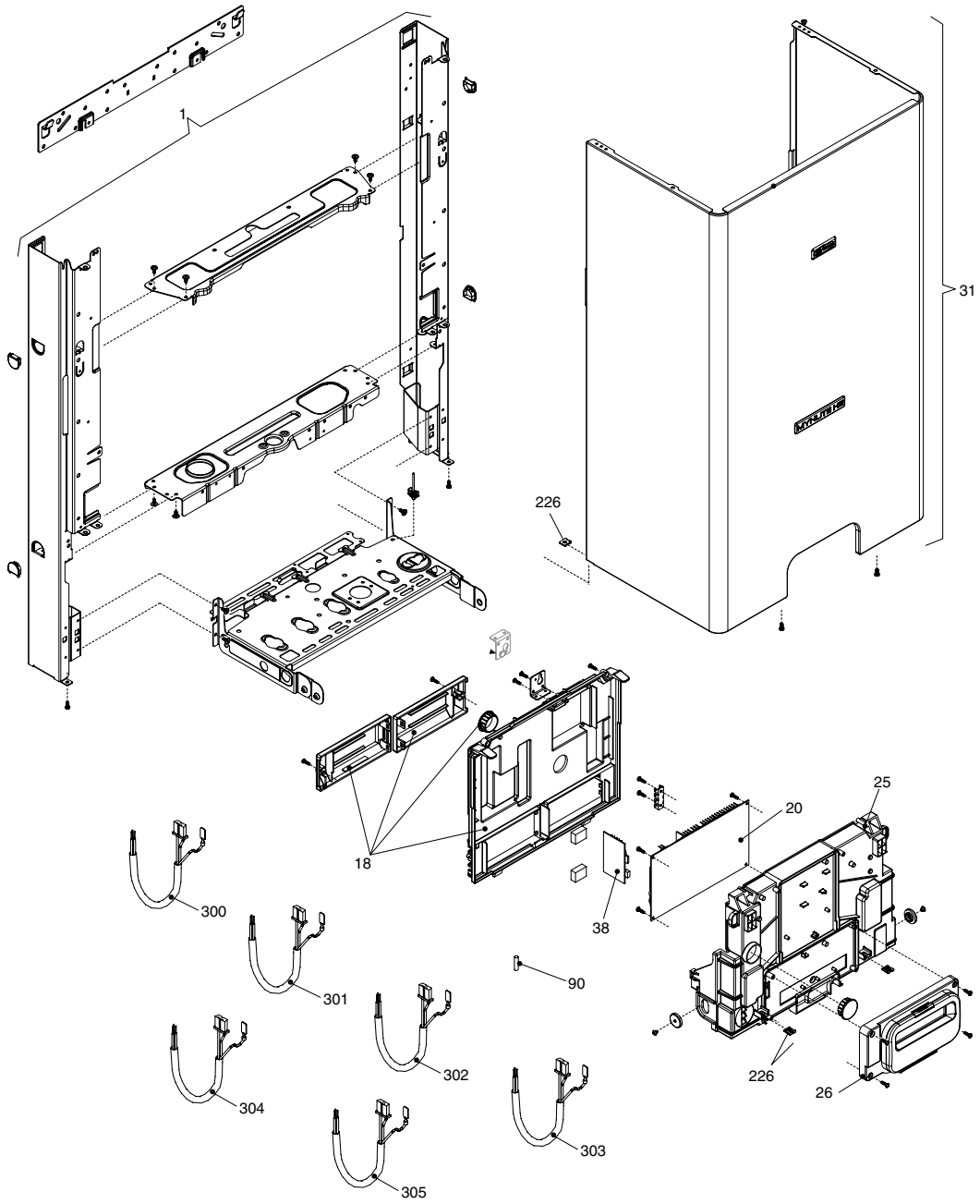

POS.	DESCRIPTION	35 HE
1	Frame assembly	01005367
18	Cover assembly	10026239
20	Printed Circuit Board	10026240
25	Front cover assembly	10025842
26	Instrumental panel	10027949
31	Case	10026241
38	Driver PCB	10027200
90	Fuse	3478
226	Edge clip	5128
300	Wiring harness	10026341
301	Wiring harness	10027953
302	Wiring harness	10027360
303	Wiring harness	10026333
304	Wiring harness	10026337
305	Wiring harness	10026330

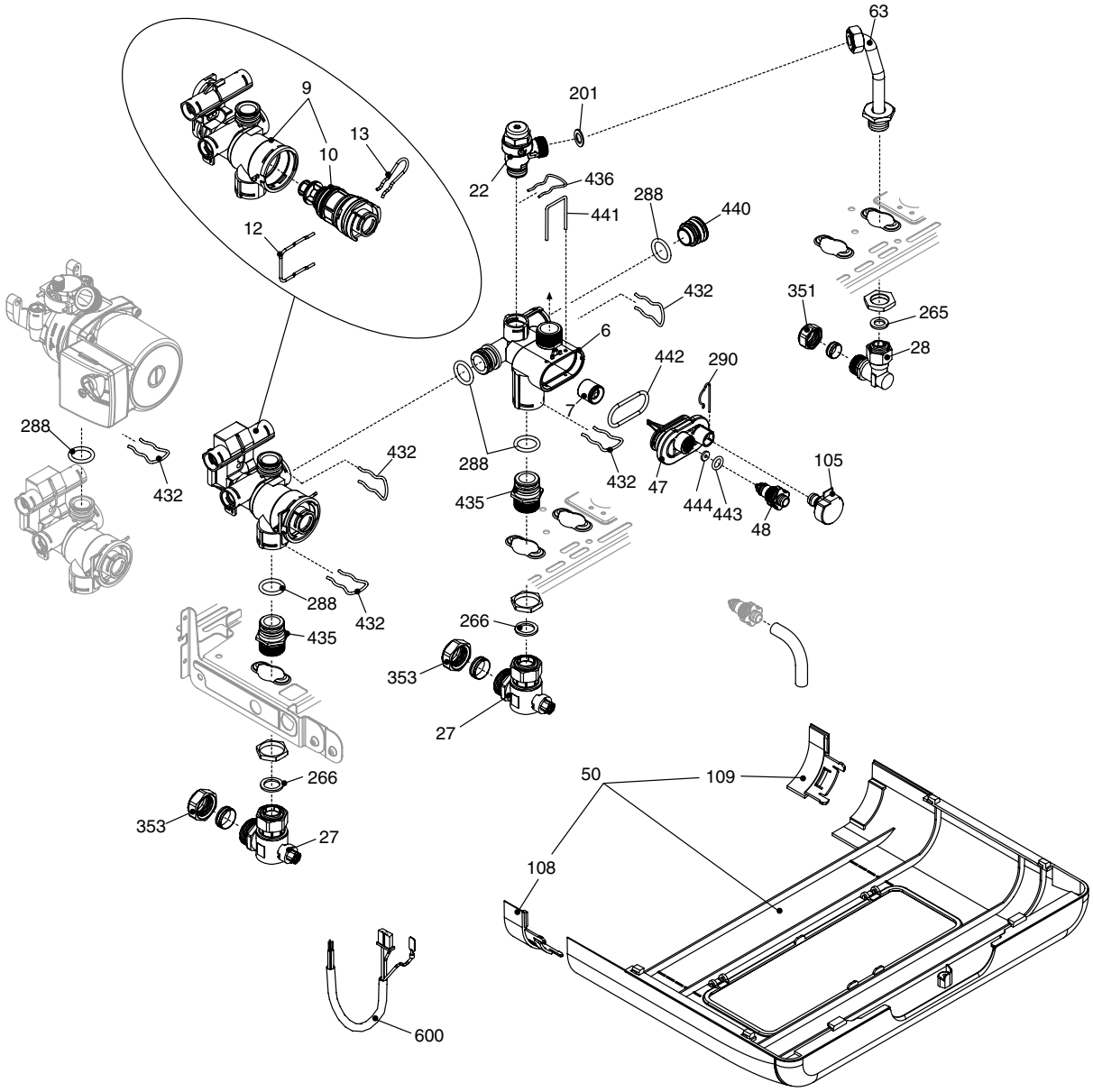

POS.	DESCRIPTION	35 HE
6	By-pass casing	10024641
7	Heating by-pass valve	2047
9	Heating manifold and cartridge	10027768
10	3 way valve cartridge	10025305
12	Fixing fork wrench	10025450
22	Safety valve	10025055
27	Heating cock	1789
28	Connection	1790
47	By-pass casing cover	10024643
48	Discharge cock	10024646
50	Connections cover	10027685
63	Pipe	10026228
105	Pressure transductor	10027132
201	Washer	5026
265	Washer	5236
266	Washer	5237
288	Washer	6898
290	Clip	2165
351	Nut	1823
353	Nut	1824
432	Clip	10024958
435	Connection	10025059
436	Clip	10025062
440	Hole cap	10024645
441	Clip	10025063
442	O-ring	10025065
443	O-ring	10025064
444	Washer	10025066
600	Wiring harness	10027952

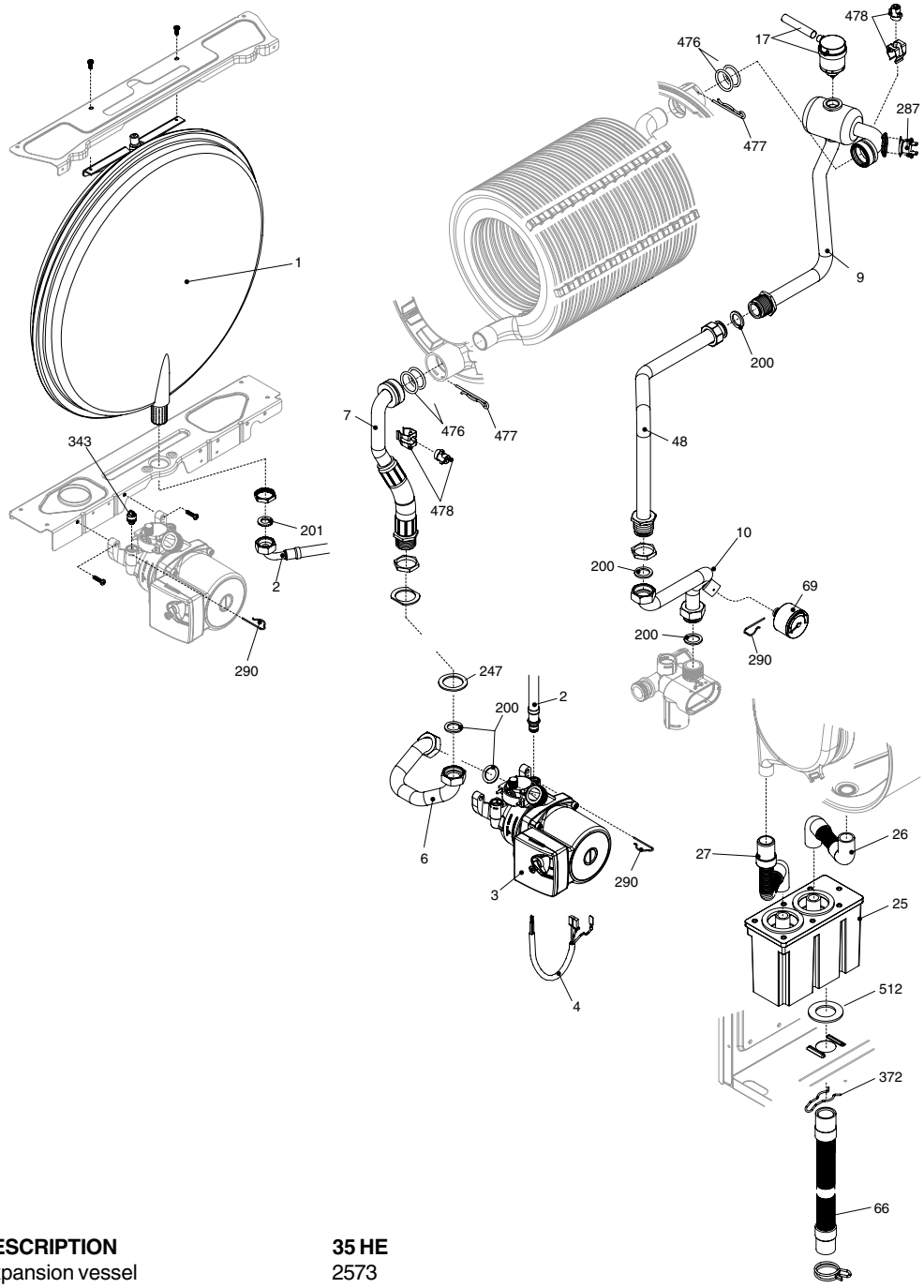

POS.	DESCRIPTION	35 HE
1	Expansion vessel	2573
2	Flexible pipe	10025188
3	Circulation pump	10027258
4	Pump cable	10026338
6	Pipe	10026264
7	Pipe	10027317
9	Pipe	10027318
10	Pipe	10027146
17	Air vent bottle	10026275
25	Siphon	10027190
26	Flexible pipe	10027191
27	Flexible pipe	10027192
48	Pipe	10027321
66	Flexible pipe	10026272
69	Pressure gauge	10027135
200	Washer	5023
201	Washer	5026
247	Washer	5203
287	Limit thermostat	2258
290	Clip	2165
343	Nut	2216
372	Clip	2588
476	O-ring	10026324
477	Clip	10026269
478	NTC sensor	10026273
512	Washer	10027193

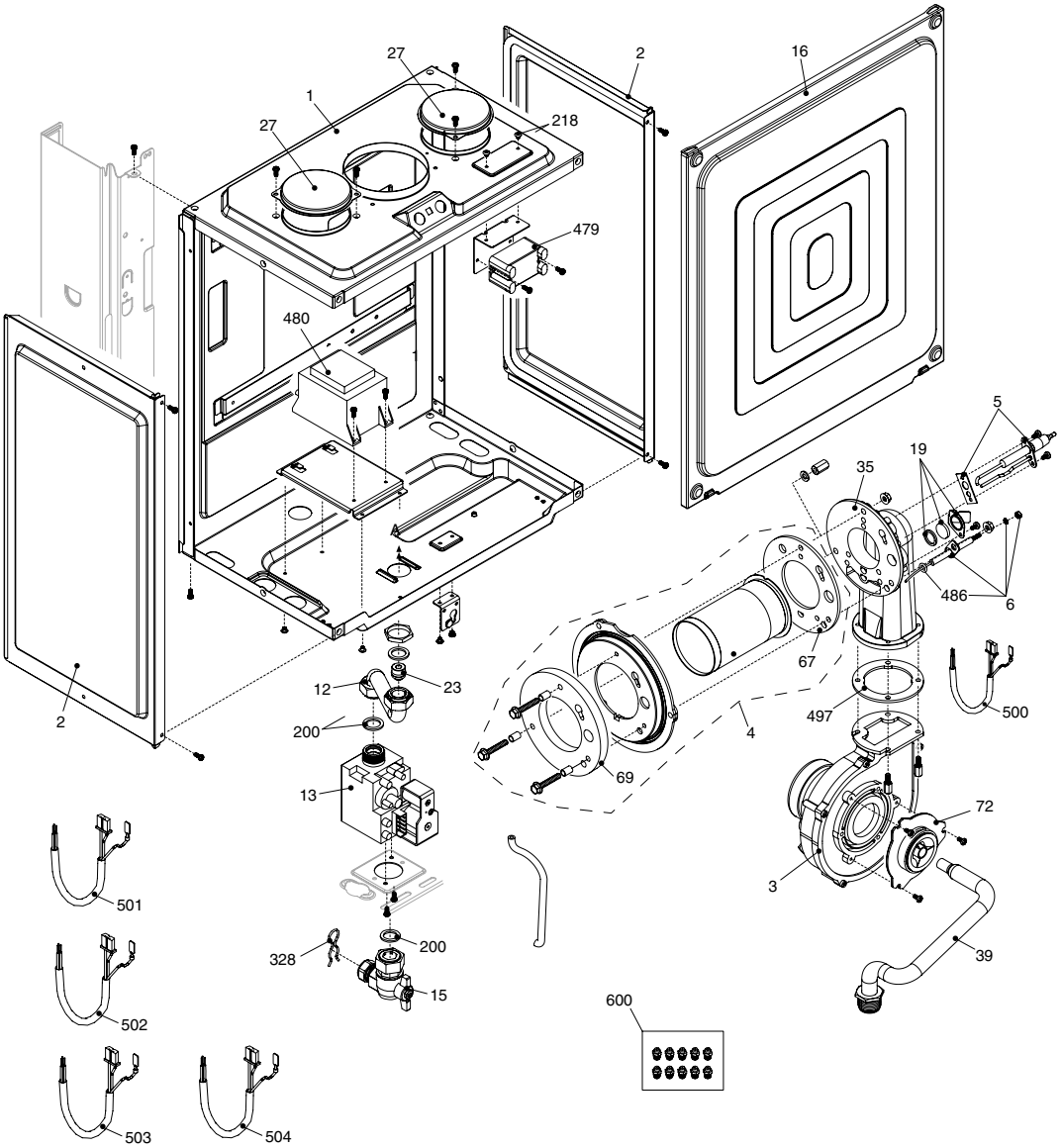

POS.	DESCRIPTION	35 HE
1	Air box bottom	10027175
2	Ambidx air box side	10026231
3	Fan	10027051
4	Burner assembly	10026548
5	Spark electrode	10027864
6	Detection electrode	10026316
12	Gas pipe	10026318
13	Gas valve	10027187
15	Gas cock	10020897
16	Air box cover	10026230
19	Glass assembly	10026328
27	Hole cap	10023805
35	Air/gas conveyor	10026309
39	Gas pipe	10027196
46	Gas diaphragm	10027162
46	Gas diaphragm	2111
67	Washer	10026322
69	Tryton	10027089
72	Mixer	10024295
200	Washer	5023
479	Transformer	10026237
480	Transformer	10026236
486	O-ring	10026325
497	Fan washer	10026796
500	Wiring harness	10026558
501	Wiring harness	10026332
502	Wiring harness	10026336
503	Wiring harness	10026339
504	Wiring harness	10024121
600	LPG conversion kit	01005390

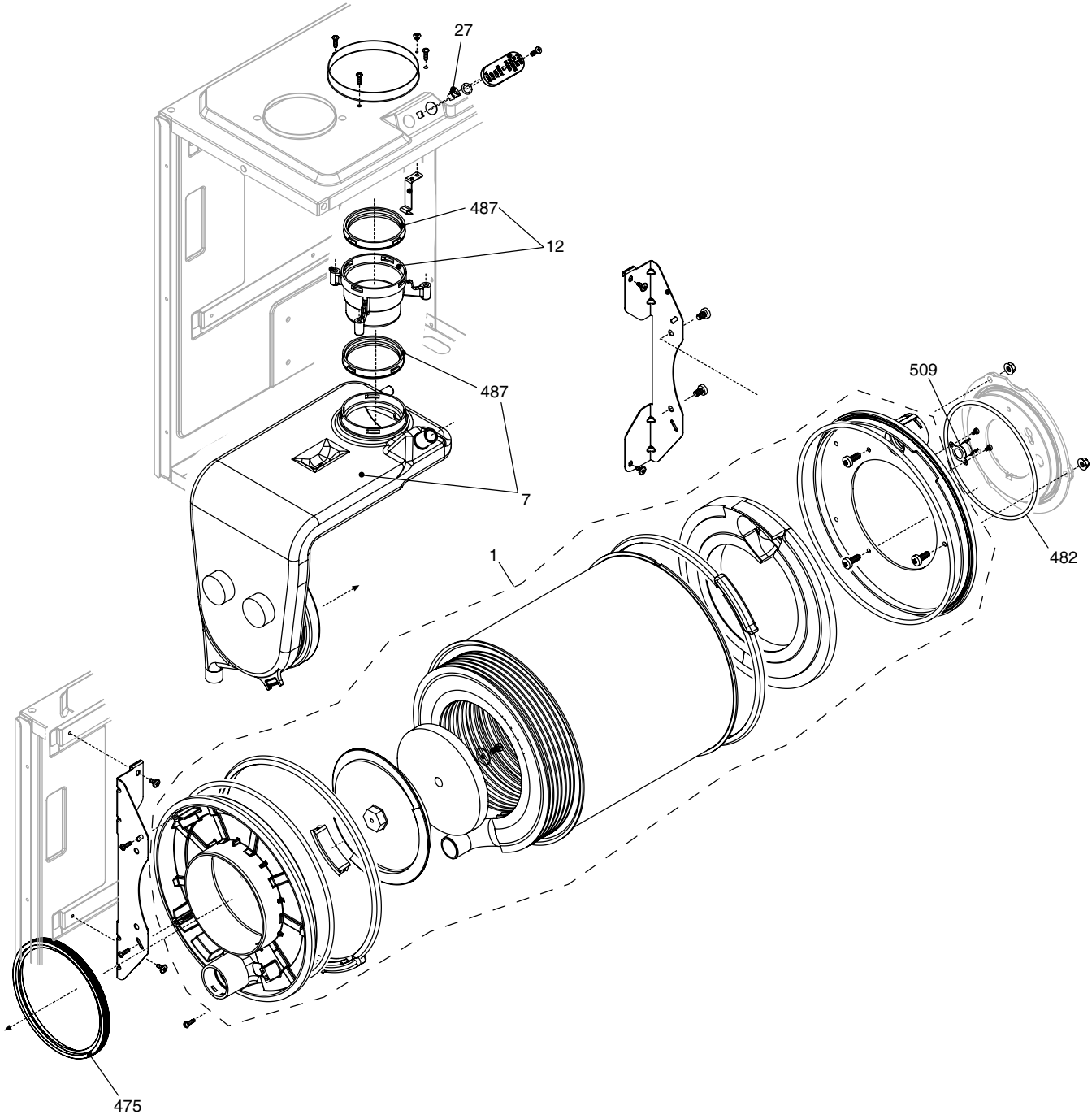

POS.	DESCRIPTION	35 HE
1	Condensing exchanger assembly	01005369
7	Conveyor assembly	10026310
12	Flue drain connection	10026311
27	Fumes testing connection screw	10020625
475	Washer	10026323
482	Washer	10026366
487	Washer	10026345
509	Limit thermostat	10026982

SECTION 10 L.P.G. INSTRUCTIONS

10.1 RELATED DOCUMENTS

BS 6798		**INSTALLATION OF BOILERS OF RATED INPUT NOT EXCEEDING 60 kW**
BS 5449	**PART 1**	**FORCED CIRCULATION HOT WATER SYSTEMS**
BS 5446		**INSTALLATION OF GAS HOT WATER SUPPLIES FOR DOMESTIC PURPOSES**
BS 5440	**PART 1**	**FLUES**
BS 5482	**PART 1**	**DOMESTIC BUTANE & PROPANE GAS BURNERS IN PERMAMENT DWELLINGS**

10.2 TECHNICAL DATA

Gas Pressures	**Mynute 35HE**
Inlet pressure	37.0 mbar
Maximum gas rate	2.69 kg/h
Minimum gas rate	0.54 kg/h
Injector size (quantity)	1 x Ø 5.0 mm
Flue details (coaxial)	**Mynute 35HE**
Maximum horizontal flue length (60/100mm)	7.80
Maximum vertical flue length (60/100mm)	8.80
Flue details (twin pipes)	**Mynute 35HE**
Maximum horizontal flue length (80mm + 80mm)	50 + 50
Maximum vertical flue length (80mm + 80mm)	50 + 50
Efficiency	**Mynute 35HE**
SEDBUK (%)	90.55 (A)
Emissions	**Mynute 35HE**
NOx (max-min)	123.2 - 105.6 mg/kWh
CO (max-min)	280.8 - 43.20 mg/kWh
CO_2 (max-min)	10.0 - 10.0 %
CO/CO_2 ratio (max)	0.002 to 1
CO/CO_2 ratio (min)	0.0004 to 1

10.3 CONVERTING THE APPLIANCE GAS TYPE

To convert the appliance to another gas type it is necessary to change the burner injector and adjust the gas valve. It is also necessary to enter the appliance engineer mode and change the fan speed at the maximum output.

- To change the injector see 6.12.1
- To change parameters see 7.3.1
- To adjust CO_2 value see 7.4.1-2

10.4 GAS SUPPLY

The gas supply must be connected to the appliance by a competent LPG installer and must be of sufficient size to supply the appliance at its maximum output. An existing supply must be checked to ensure that it is of adequate size to deal with the maximum rated input of this and any other appliances that it serves.

10.5 GAS SUPPLY INSTALLATION

The entire installation including the meter must be purged and checked for gas soundness.

10.6 ADJUSTING THE GAS VALVE

THE GAS VALVE MUST BE SET-UP OR ADJUSTED WITH THE AID OF A PROPERLY CALIBRATED FLUE GAS ANALYSER.

Isolate the appliance from the electrical supply and remove the appliance casing as described in 4.7.1. Set the flue gas analyser to read CO_2 and insert the probe into the flue analysis test point (seee fig. 1). Restore the electrical supply to the boiler and switch off the boiler. Push INFO and MODE buttons at the same time for 10 seconds to enter the adjusting menu. The display shows “CodE” (see fig. 43). Select the adjusting password by turning the RH (right-hand) encoder and confirm it by pushing MODE button.

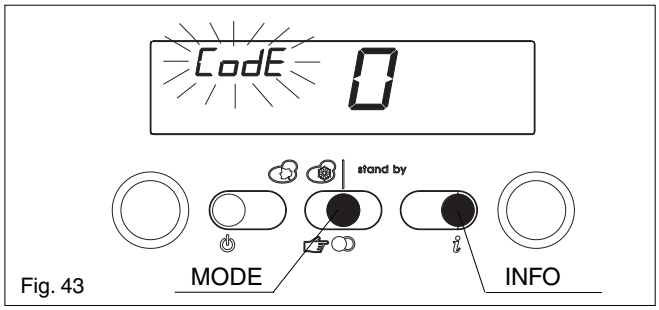

Fig. 43

10.6.1 MAXIMUM SETTING

Select the HH parameter by turning the RH (right-hand) encoder and confirm it by pushing MODE button. The boiler starts at the maximum power, the CO_2 reading should be as shown in the table above. If the CO_2 reading is correct, press the MODE button to exit the maximum setting. If the CO_2 reading is incorrect, the maximum gas pressure must be adjusted as follows:

- using a suitable screwdriver, very slowly turn the maximum adjustment screw (see fig. 38) - clockwise to decrease, counter clockwise to increase - until the correct value is displayed on the CO_2 analyser (allow time for the analyser to stabilise).

IMPORTANT
A GAS SOUNDNESS CHECK MUST BE CARRIED OUT.

10.6.2 MINIMUM SETTING

Select the LL parameter by turning the RH (right-hand) encoder and confirm it by pushing MODE button. The boiler starts at the minimum power, the CO_2 reading should be as shown in the table above. If the CO_2 reading is correct, press the MODE button to exit the minimum setting. If the CO_2

reading is incorrect, the minimum gas pressure must be adjusted as follows:

- using a suitable screwdriver, very slowly turn the minimum adjustment screw (see fig. 38) - clockwise to increase, counter clockwise to decrease - until the correct value is displayed on the CO_2 analyser (allow time for the analyser to stabilise).
- using the procedure detailed in 9.6.1, check that the maximum setting correct value is still being obtained. If not, repeat the above procedure.

BENCHMARK No. | | | | | | |

COLLECTIVE MARK

GAS BOILER COMMISSIONING CHECKLIST

BOILER SERIAL No. _____ NOTIFICATION No. _____

CONTROLS

To comply with the Building Regulations, each section must have a tick in one or other of the boxes

TIME & TEMPERATURE CONTROL TO HEATING	ROOM T/STAT & PROGRAMMER/TIMER	☐	PROGRAMMABLE ROOMSTAT	☐
TIME & TEMPERATURE CONTROL TO HOT WATER	CYLINDER T/STAT & PROGRAMMER/TIMER	☐	COMBI BOILER	☐
HEATING ZONE VALVES	FITTED	☐	NOT REQUIRED	☐
HOT WATER ZONE VALVES	FITTED	☐	NOT REQUIRED	☐
THERMOSTATIC RADIATOR VALVES	FITTED	☐		
AUTOMATIC BYPASS TO SYSTEM	FITTED	☐	NOT REQUIRED	☐

FOR ALL BOILERS CONFIRM THE FOLLOWING

THE SYSTEM HAS BEEN FLUSHED IN ACCORDANCE WITH THE BOILER MANUFACTURER'S INSTRUCTIONS?	☐
THE SYSTEM CLEANER USED	
THE INHIBITOR USED	

FOR THE CENTRAL HEATING MODE, MEASURE & RECORD

GAS RATE		^{3}/hr		^{3}/hr
BURNER OPERATING PRESSURE (IF APPLICABLE)	☐	N/A		
CENTRAL HEATING FLOW TEMPERATURE				°C
CENTRAL HEATING RETURN TEMPERATURE				°C

FOR COMBINATION BOILERS ONLY

HAS A WATER SCALE REDUCER BEEN FITTED?	YES ☐	NO ☐
WHAT TYPE OF SCALE REDUCER HAS BEEN FITTED?		

FOR THE DOMESTIC HOT WATER MODE, MEASURE & RECORD

GAS RATE		^{3}/hr		^{3}/hr
MAXIMUM BURNER OPERATING PRESSURE (IF APPLICABLE)	☐	N/A		mbar
COLD WATER INLET TEMPERATURE				°C
HOT WATER OUTLET TEMPERATURE				°C
WATER FLOW RATE				lts/min

FOR CONDENSING BOILERS ONLY CONFIRM THE FOLLOWING

THE CONDENSATE DRAIN HAS BEEN INSTALLED IN ACCORDANCE WITH THE MANUFACTURER'S INSTRUCTIONS?	YES ☐

FOR ALL INSTALLATIONS CONFIRM THE FOLLOWING

THE HEATING AND HOT WATER SYSTEM COMPLIES WITH CURRENT BUILDING REGULATIONS				☐
THE APPLIANCE AND ASSOCIATED EQUIPMENT HAS BEEN INSTALLED AND COMMISSIONED IN ACCORDANCE WITH THE MANUFACTURER'S INSTRUCTIONS				☐
IF REQUIRED BY THE MANUFACTURER, HAVE YOU RECORDED A CO/CO_2 RATIO READING?	N/A ☐	YES		CO/CO_2 RATIO
THE OPERATION OF THE APPLIANCE AND SYSTEM CONTROLS HAVE BEEN DEMONSTRATED TO THE CUSTOMER				☐
THE MANUFACTURER'S LITERATURE HAS BEEN LEFT WITH THE CUSTOMER				☐

COMMISSIONING ENG'S NAME PRINT _____ CORGI ID No. _____

SIGN _____ DATE _____

SERVICE INTERVAL RECORD

It is recommended that your heating system is serviced regularly
and that you complete the appropriate Service Interval Record Below.

Service Provider. Before completing the appropriate Service Interval Record below, please ensure you have carried out the service as described in the boiler manufacturer's instructions. Always use the manufacturer's specified spare part when replacing all controls

SERVICE 1 DATE
ENGINEER NAME
COMPANY NAME
TEL No.
CORGI ID CARD SERIAL No.
COMMENTS

SIGNATURE

SERVICE 2 DATE
ENGINEER NAME
COMPANY NAME
TEL No.
CORGI ID CARD SERIAL No.
COMMENTS

SIGNATURE

SERVICE 3 DATE
ENGINEER NAME
COMPANY NAME
TEL No.
CORGI ID CARD SERIAL No.
COMMENTS

SIGNATURE

SERVICE 4 DATE
ENGINEER NAME
COMPANY NAME
TEL No.
CORGI ID CARD SERIAL No.
COMMENTS

SIGNATURE

SERVICE 5 DATE
ENGINEER NAME
COMPANY NAME
TEL No.
CORGI ID CARD SERIAL No.
COMMENTS

SIGNATURE

SERVICE 6 DATE
ENGINEER NAME
COMPANY NAME
TEL No.
CORGI ID CARD SERIAL No.
COMMENTS

SIGNATURE

SERVICE 7 DATE
ENGINEER NAME
COMPANY NAME
TEL No.
CORGI ID CARD SERIAL No.
COMMENTS

SIGNATURE

SERVICE 8 DATE
ENGINEER NAME
COMPANY NAME
TEL No.
CORGI ID CARD SERIAL No.
COMMENTS

SIGNATURE

SERVICE 9 DATE
ENGINEER NAME
COMPANY NAME
TEL No.
CORGI ID CARD SERIAL No.
COMMENTS

SIGNATURE

SERVICE 10 DATE
ENGINEER NAME
COMPANY NAME
TEL No.
CORGI ID CARD SERIAL No.
COMMENTS

SIGNATURE

Cod. 10027954 - 09/06 - Ed. 2

energizing home heating

Vokèra Ltd.
4th Floor, Catherine House, Boundary Way, Hemel Hempstead, Herts, HP2 7RP

Email: enquiries@vokera.co.uk Web: www.vokera.co.uk
Sales, Technical Advice, General Enquiries - Tel: 0870 333 0520 Fax: 01442 281403
After Sales Service - Tel: 0870 333 0220

Vokèra Ireland
West Court, Callan, Co Kilkenny
Tel: 05677 55057 Fax: 05677 55060

A Riello Group Company

"Vokèra"
supports Benchmark